Maximum allowable ballast:

148 kg

distributed on mounted Porter Set (2 pieces)

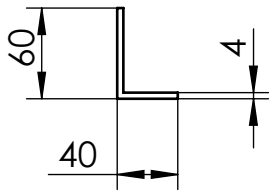

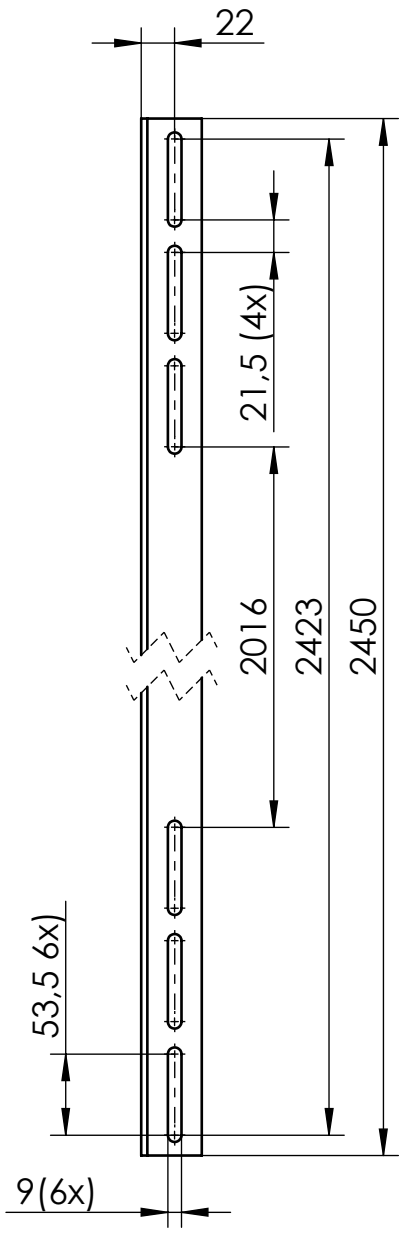

Isometric
1:10

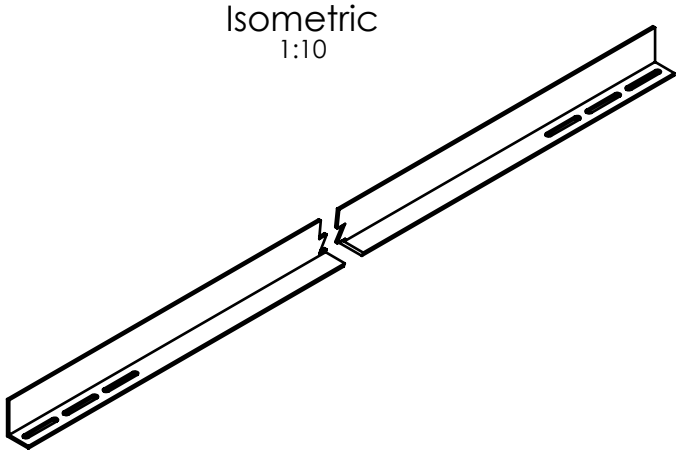

Designation	Modul dimension [mm]	Surface
Dome Porter X-tra long	1998-2405	mill finish

K2 Systems GmbH
Haldenstr. 1
71272 Renningen
Germany
+49 7159 42059-0

Designation:

Data sheet
Dome Porter X-tra long Alu
1998-2405

	Name	Date	Material:	Item no.:	Revision:	
Designed	Gerstenberger	03.03.2021	EN AW 6063 T66	2004098	06	A4
Approved	JMA	25.09.2026	Surface: see table			All dimensions in mm
Last change	CNI	24.09.2026	Weight: ca. 2504.8 g/pc	Scale: 1:5		Sheet 1 of 1

This drawing is the sole property of K2 Systems GmbH. It is protected by copyright and may only be copied, reproduced or distributed to a third party with explicit permission!