Maximum allowable ballast:

108 kg
distributed on mounted Porter Set (2 pieces)

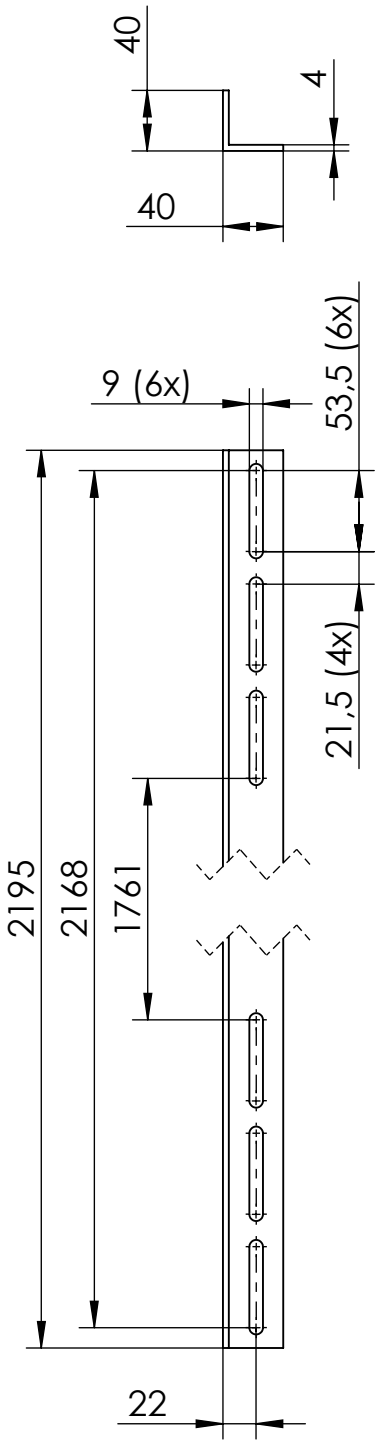

Isometric
1:10

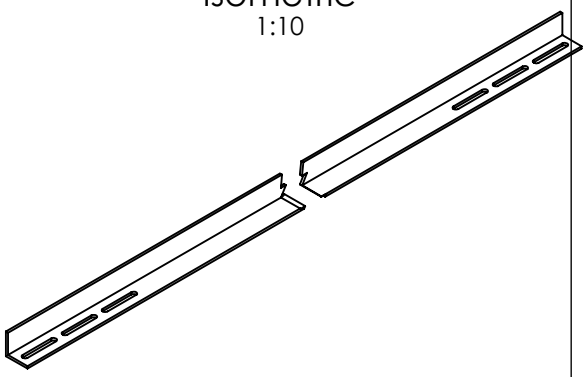

For modul dimension: 1743-2150 mm

K2 Systems GmbH
Haldenstr. 1
71272 Renningen
Germany
+49 7159 42059-0

Designation:

Data sheet
Dome Porter long Alu

	Name	Date	Material:	Item no.:	Revision:	
Designed	S. Frey	18.06.2020	EN AW 6063 T66	2003151	10	A4
Approved	JMA	24.09.2026	Surface: mill finish			All dimensions in mm
Last change	CNI	24.09.2026	Weight: ca. 1766.3 g/pc	Scale: 1:5		Sheet 1 of 1

This drawing is the sole property of K2 Systems GmbH. It is protected by copyright and may only be copied, reproduced or distributed to a third party with explicit permission!