

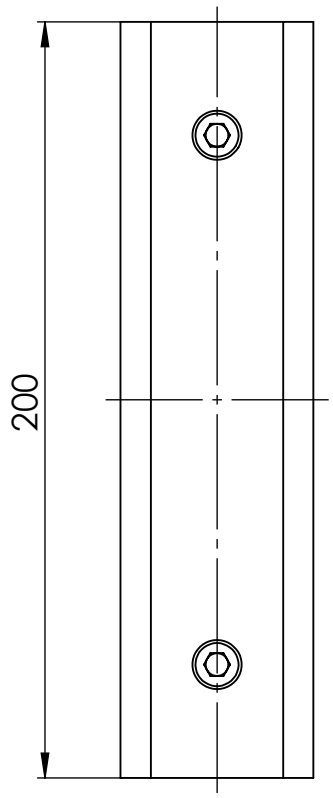

Isometric

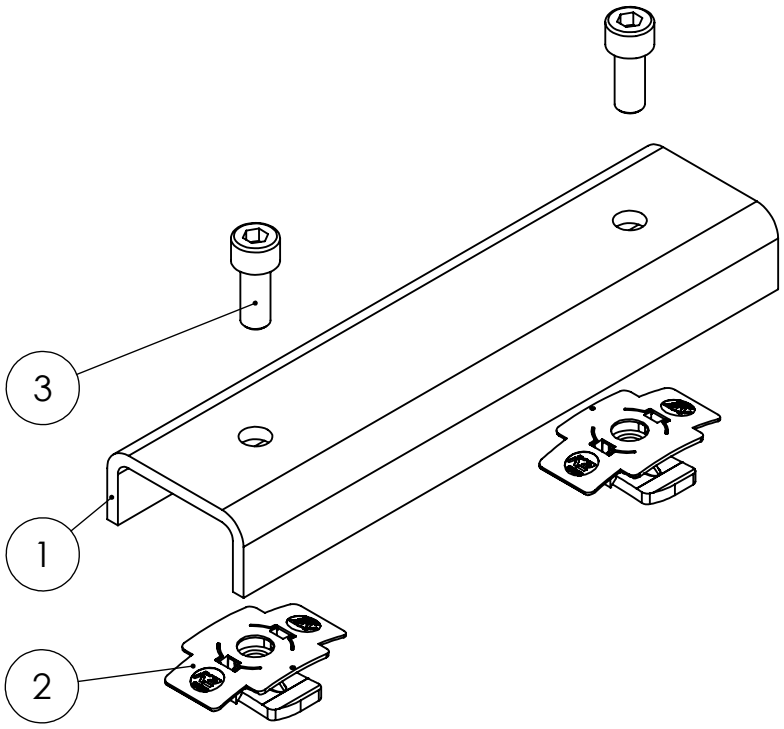

Pos.No.	Designation	Material	Quantity
1	FlatConnector Alu	EN AW 5754 H111	1
2	MK2	TPC/ 1.4301	2
3	Socket head bolt - serrated - sim. ISO 4762 - M8x20 - A2-70	A2-70	2

K2 Systems GmbH
Haldenstr. 1
71272 Renningen
Germany
+49 7159 42059-0

Designation:

Data sheet
Dome FlatConnector Alu Set

	Name	Date	Material:	Item no.:	Revision:	
Designed	M. Schuler	05.12.2024	see table	1006039	04	A4
Approved	JMA	24.09.2026	Surface: -			All dimensions in mm
Last change	CNI	24.09.2026	Weight: ca. 253.2 g/pc	Scale: 1:2		Sheet 1 of 1

This drawing is the sole property of K2 Systems GmbH. It is protected by copyright and may only be copied, reproduced or distributed to a third party with explicit permission!