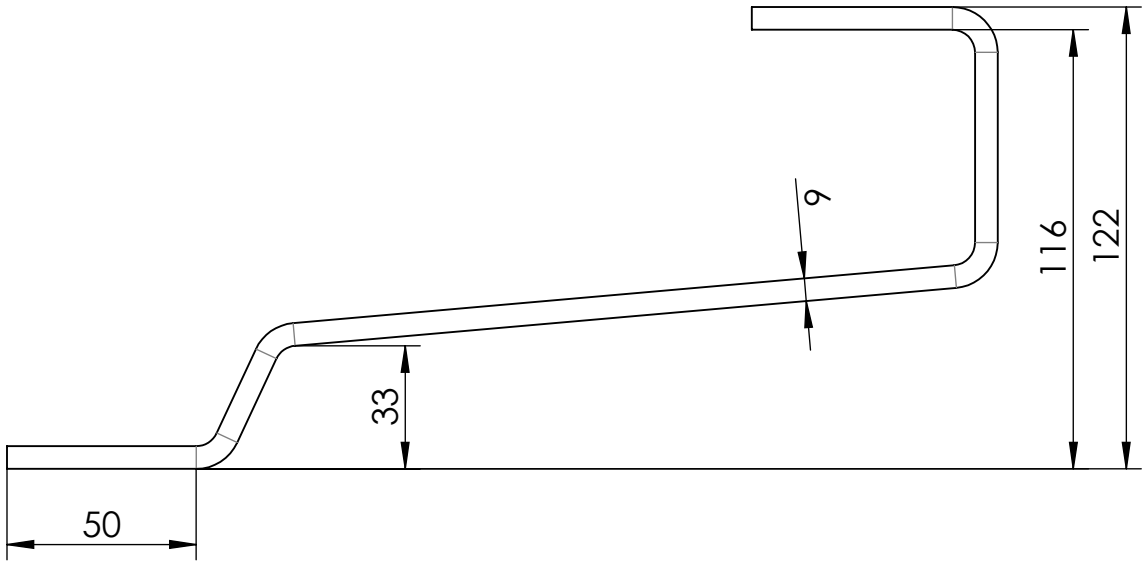

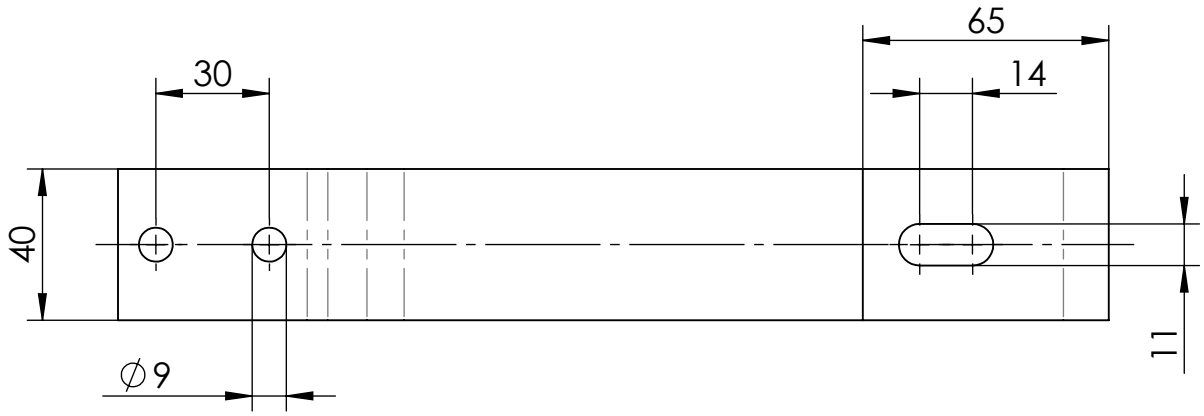

Isometric
1:5

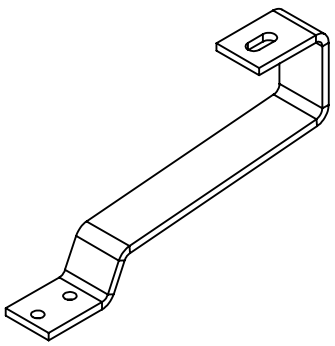

K2 Systems GmbH
Haldenstr. 1
71272 Renningen
Germany
+49 7159 42059-0

Designation:

Data sheet SolidHook FLA H33/122 40x6

	Name	Date	Material:	Item no.:	Revision:	
Designed	Renz	21.01.2009	1.4301 S275	1000214	05	A4
Approved	KMA	06.02.2026	Surface: blank			All dimensions in mm
Last change	ASO	05.02.2026	Weight: ca. 741.51 g/pc	Scale: 1:2		Sheet 1 of 1

This drawing is the sole property of K2 Systems GmbH. It is protected by copyright and may only be copied, reproduced or distributed to a third party with explicit permission!