AMTRON® Xtra (E/R), Trend E, Premium (E/R)

The MENNEKES AMTRON® Wallbox is a charging station for use in private and semi-public areas, such as private land, company car parks and depots.

- Charging acc. Mode 3 (IEC 61851)
- Vehicle connectors and charging socket acc. IEC 62196

- Integrated cable suspender

Optional:

- Charging socket type 2
- Permanently connected charging cable with connector type 2 (Length 7,5m)
- Permanently connected charging cable with connector type 1 (Length 7,5m)

- Charging power up to 22 kW

Date: 02-2018 – V.6.0

Technical changes reserved

MENNEKES Elektrotechnik GmbH & Co. KG
Aloys-Mennekes-Straße 1 | D-57399 Kirchhundem
Tel. +49 (0) 27 23 / 41-1 | Fax +49 (0) 27 23 / 41-214
info@MENNEKES.de | **www.MENNEKES.de**

PRODUCTFEATURES

- Status information through LED info bar
- Integration into the home network over WLAN / LAN
- RS 485 interface for wired networking with a MENNEKES eMobility-Gateway
- Multi-function button
  - Stop function (adjustable parameters; deactivated by default)
  - Reset function
  - RCD test (only with integrated RCD)
  - Re-activating of RCD and CB (only with integrated RCD / CB)
- Unlocking function in case of power failure (only for devices with charging socket type 2)
- Charge APP (download for free)
  - Authorising and visualising the charging processes
  - Statistic function
  - Display of the charged amount of energy and the energy costs
  - Data export of charging processes (file format: pdf and csv)
  - Selective operation modes: manual (APP-control), time-controlled (internal), external tariff signal, Energy Manager
  - Alert function
  - Whitelist management for RFID-cards
- RFID system for authorising with local whitelist (up to 98 users)
  (only for Trend E und Premium (E/R) - devices)
- Enclosure made of AMELAN®
- Wired ready for connection

Technical changes reserved
Date: 02-2018 – V.6.0

VERSIONS

	RFID system			RFID system	RFID system
			Personal protection (RCD)		Personal protection (RCD)
		Calibrated digital energy meter	Calibrated digital energy meter	Calibrated digital energy meter	Calibrated digital energy meter
		Amount of charged energy displayed by Charge APP	Amount of charged energy displayed by Charge APP	Amount of charged energy displayed by Charge APP	Amount of charged energy displayed by Charge APP
		Statistic function by Charge APP	Statistic function by Charge APP	Statistic function by Charge APP	Statistic function by Charge APP
	Charge APP over LAN / WLAN	Charge APP over LAN / WLAN	Charge APP over LAN / WLAN	Charge APP over LAN / WLAN	Charge APP over LAN / WLAN
	LED status display Stop button	LED status display Stop button	LED status display Multi function button	LED status display Stop button	LED status display Multi function button
	Trend E	**Xtra E**	**Xtra R**	**Premium E**	**Premium R**
	Part number	Part number	Part number	Part number	Part number
Charging socket type 2 (version „T2“)	**3,7 / 7,4 kW** 1357400	**3,7 / 7,4 kW** 1354400			**3,7 / 7,4 kW** 1355400
			11 kW 1354451		**11 kW** 1355401
Ⓐ	**11 / 22 kW** 1357401	**11 / 22 kW** 1354401		**11 / 22 kW** 1355451	
Charging socket type 2 with Shutter (version „T25“)	**3,7 / 7,4 kW** 1347680	**3,7 / 7,4 kW** 1354600	**3,7 / 7,4 kW** 1344680		**3,7 / 7,4 kW** 1345680
			11 kW 1344681		**11 kW** 1345681
only for FR, IT, ES, UK Ⓓ	**11 / 22 kW** 1347681	**11 / 22 kW** 1354601		**11 / 22 kW** 1355601	
Permanently connected charging cable with connector type 2 (version „C2“)	**7,4 kW** 1357203	**7,4 kW** 1354203			
Ⓑ	**22 kW** 1357202	**22 kW** 1354202	**22 kW** 1354252	**22 kW** 1355252	**22 kW** 1355202
Permanently connected charging cable with connector type 1 (version „C1“) Ⓒ	**3,7 kW** 1357100	**3,7 kW** 1354100			

Technical changes reserved
Date: 02-2018 – V.6.0

TECHNICAL DATA

Charging power Mode 3		3,7 kW	7,4 kW	11 kW	22kW
Rated voltage U_n		230 V AC ±10 %	230 V AC ±10 %	400 V AC ±10 %	400 V AC ±10 %
Rated frequency f_n		50 Hz			
Rated current I_{nA}		16 A	32 A	16 A	32 A
Charging current Mode 3 I_{nC}		16 A, 1 ph	32 A, 1 ph	16 A, 3 ph	32 A, 3 ph
Degree of protection		IP 44 (permanently attached charging cable or charging socket type 2 with Shutter) IP 54 (charging socket type 2 with hinged lid)			
Protection class		II			
Dimensions		474,8 mm x 259,2 mm x 220,1 mm (H x W x D)			
Rated impulse withstand voltage U_{imp}		4 kV			
Rated short circuit current I_{cc}		10 kA			
Rated diversity factor RDF		1			
Pollution degree		3			
Earthing system		TN/TT			
Condition of installation		Stationary equipment			
Usage		ACSEV			
Mounting method		wall mounting, surface mounting			
EMC classification		A+B			
Resistance to mechanical impact (IK)		IK08			
Rated insulation voltage U_i		500 V			
Maximum cable cross-sections at the terminals	Rigid	3 x 6 mm²	3 x 10 mm²	5 x 6 mm²	5 x 10 mm²
	Flexible	3 x 4 mm²	3 x 6 mm²	5 x 4 mm²	5 x 6 mm²
Maximum cable cross-sections at the terminals (*Art. Xtra E and Premium E)*	Rigid	3 x 16 mm²		5 x 16 mm²	
	Flexible	3 x 10 mm²		5 x 10 mm²	

ENVIRONMENTAL CONDITIONS

Ambient air temperature	-25 … +40 °C
Average temperature within 24 hours	< 35 °C
Storage temperature	-25 … +40 °C
Altitude	max. 2.000 m above sea level
Relative humidity	max. 95 % (non-condensing)

Technical changes reserved
Date: 02-2018 – V.6.0

Technical changes reserved
Date: 02-2018 – V.6.0

PERSONAL AND CIRCUIT PROTECTION (RCD / CB)

Version	RCCB type B	CB
Xtra E, Trend E (3,7 kW / 7,4 kW, 1 ph)	-	-
Xtra E, Trend E, Premium E (11 kW / 22 kW, 3 ph)	-	-
Xtra R, Premium R (3,7 kW / 7,4 kW, 1 ph)	x	-
Xtra R, Premium R (11 kW / 22 kW, 3 ph)	x	-

Note the following when connecting the charging station:

- Each charging station must be connected using a separate residual current circuit breaker (RCCB) (see IEC 60364-7-722)
- Charging stations with integrated residual current circuit breaker are delivered with RCCB type B.
- No other circuits may be connected to this residual current circuit breaker.
- For versions Xtra E, Trend E and Premium E, the residual current circuit breaker (RCCB) must be provided on site.
- For versions Xtra E, Xtra R, Trend E und Premium R the circuit breaker (CB) must be provided on site.

ASSEMBLY

Front view (example)

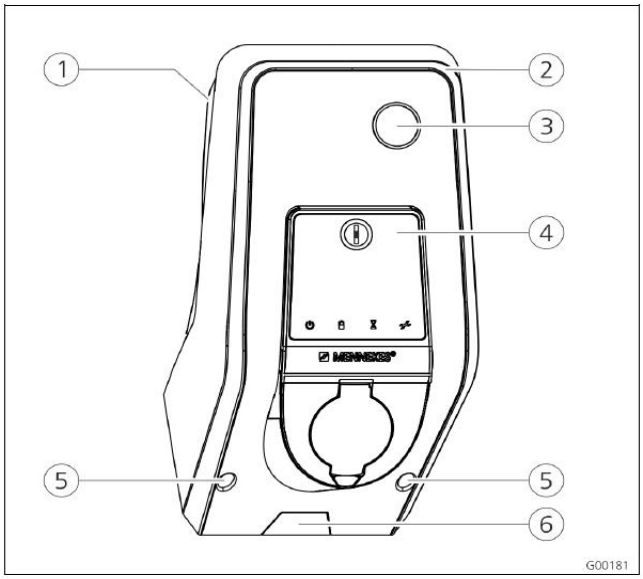

① Rear enclosure part
② Front enclosure part
③ Window for counter
④ Front panel
⑤ Fastening screws for front enclosure part
⑥ Predetermined breaking point for supply line / cable duct from below

Rear view (example)

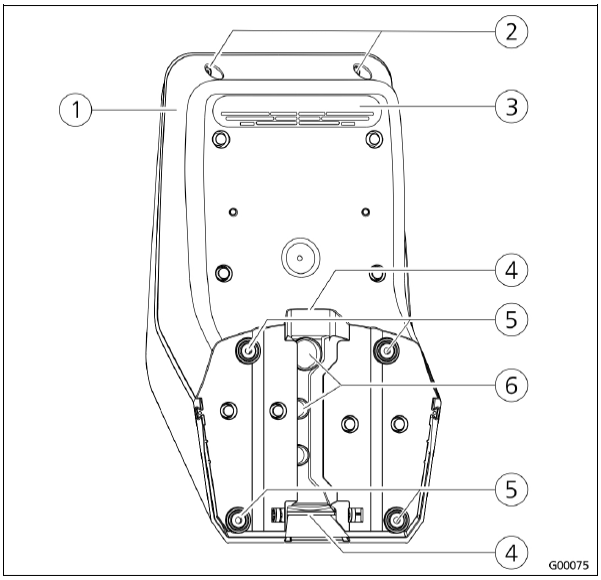

① Rear enclosure part
② Fastening screws for front enclosure part
③ Air outlet
④ Opening for cable duct
⑤ Fastening holes
⑥ Cable glands

DELIVERY CONTENTS

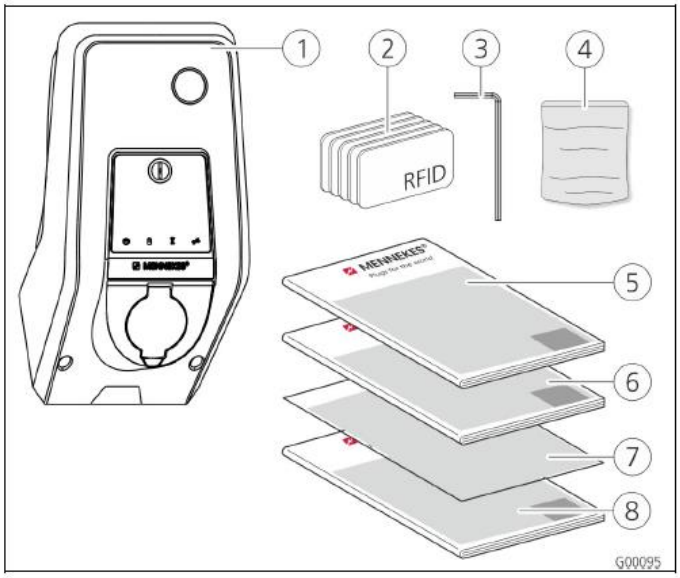

1. Charging station
2. RFID cards (2x master, 3x user)[1)]
3. Allen key
4. Bag with installation hardware (screws, dowels, plugs)
5. Operation manual
6. Installation manual
7. Set-up data sheet
8. Quick guide

1) Only for versions Trend, Premium.

DIMENSIONS

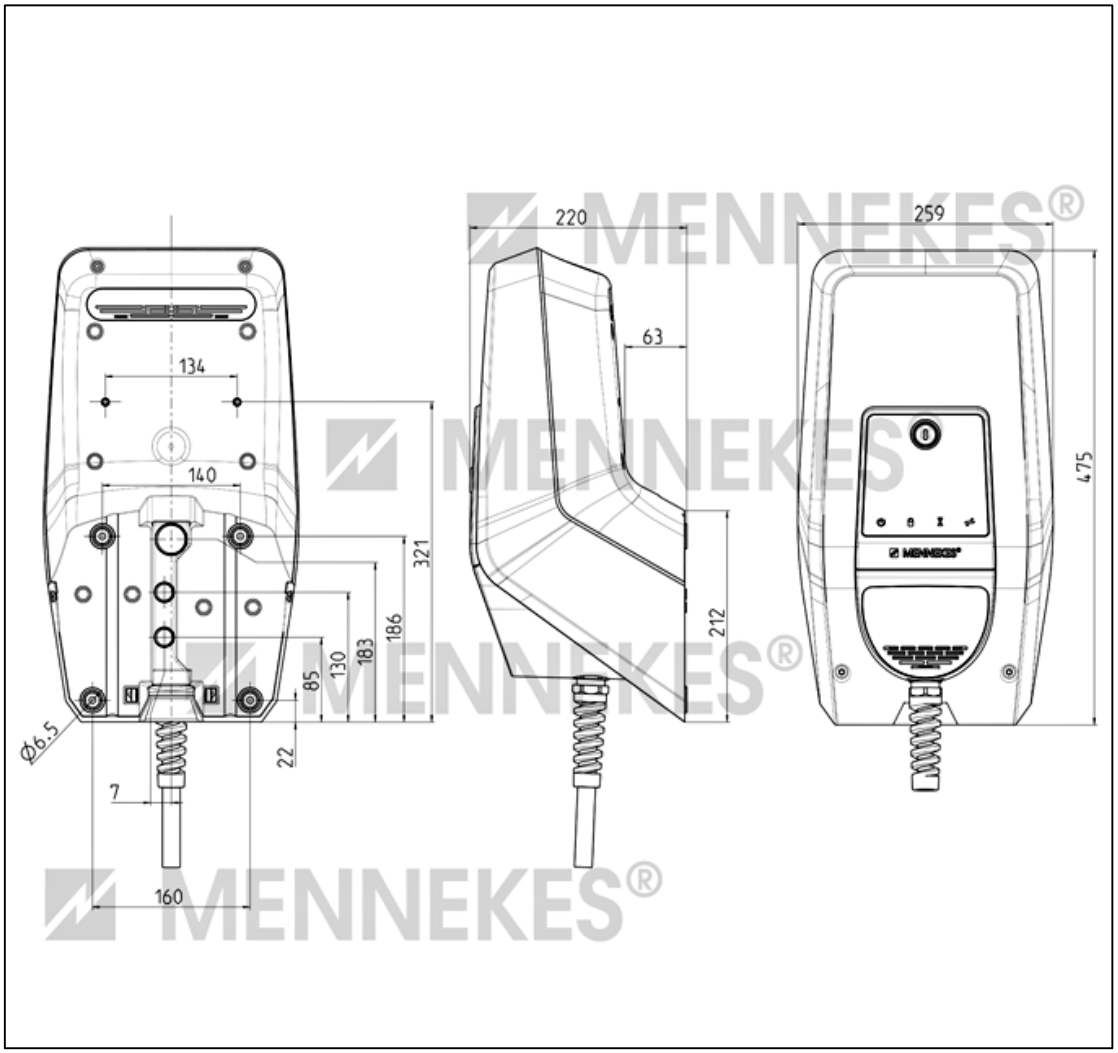

MENNEKES®

Technical changes reserved
Date: 02-2018 – v.6.0

MENNEKES®
eMobility

CHARGE UP YOUR DAY!

Thousands of MENNEKES charging points are in daily use in Europe, delighting users in their diverse life situations.

As an innovative leader we offer a broad portfolio of charging solutions for the private and public applications

Charge up your day with MENNEKES, the specialist for **intelligent eMobility charging solutions.**

MENNEKES
Elektrotechnik GmbH & Co. KG
Industrial plugs and sockets

Aloys-Mennekes-Str. 1
57399 Kirchhundem
GERMANY

Tel.: +49(0)2723/41-1
Fax: +49(0)2723/41-2 14
E-Mail: info@MENNEKES.de

WWW.MENNEKES.DE
WWW.CHARGEUPYOURDAY.DE