Operation Manual

AXIstorage Li SV3

Usable Capacity: 9,7 – 34 kWh

5PMPA08-20025

I-LiSV3-EN250711

This manual introduces Li SV 3 from AXITEC. Li SV 3 is a high voltage Lithium-Ion Phosphate Battery storage system. Please read this manual before you install the battery and follow the instructions carefully during the installation process. In case of any confusion, please contact AXITEC immediately for advice and clarification.

CONTENTS

1.SAFETY 1

1.1 Symbols 2
1.2 General Safety Instructions 4
1.3 Safety Instructions Before Connecting the Battery 5
1.4 Safety Instructions in Using the Battery 5

2. SYSTEM INTRODUCTION 6

2.1 Product Introduction 6
2.2 Specifications 6
2.2.1 System Parameters 7
2.2.1.1 Single String System Parameters 7
2.2.1.2 Multi-strings System Parameters (maximum 6 Strings per System) 9
2.2.2 Battery Module Specifications (Energypack SV3) 10
2.2.2.1 Battery Module Parameters 10
2.2.3 Control Module Specifications 11
2.2.3.1 Control Module Parameters 11
2.2.3.2 Control Module Display Panel 11
2.2.3.3 Control Module Interface Panel 15
2.3 System Diagram 22

3. INSTALLATION 23

3.1 Tools 23
3.2 Safety Gear 23
3.3 System Working Environment Checking 24
3.3.1 Cleaning 24
3.3.2 Temperature 24
3.3.3 Fire-Extinguisher System 24
3.3.4 Grounding System 24
3.3.5 Clearance 24
3.4 Handling And Placement 25
3.4.1 Handling And Placement Of The Battery Module 25
3.4.2 Handling And Placement Of The Base 25
3.4.3 Requirements Of Installation Site 25
3.4.4 Packing List 26
3.4.5 Mounting And Installation Of The Battery Rack Base 27
3.4.6 Installation Of The Battery Module Onto The Base 28
3.4.7 Battery Modules And Control Module (Bms) Pile Up 29
3.4.8 Installation Of The Metal Brackets For The System 30

3.4.9Installation of the Anti-Toppling Brackets for the System 32
3.5 Cables Connection 37
3.5.1 Grounding 37
3.5.2 Cables 38
3.5.3 Multi-Strings' Battery Wiring Diagram 39
3.5.3.1 Electrical Wiring 39
3.5.3.2 Communication Cables Connection Of Master And Slave Battery Strings 41

4. OPERATION 42

4.1 System Power On 42
4.1.1 Single String System Power On 42
4.1.2 Multi-strings System Power On 44
4.2 System Power Off 45

5. SYSTEM DEBUG 46

6. MAINTENANCE 47

6.1 Trouble Shooting 47
6.2 Replacement Of Main Components 49
6.2.1 Replacement Of Battery Module 49
6.2.2 Replacement Of Control Module (Bms) 50
6.3 Battery Maintenance 51
6.3.1 Voltage Check 51
6.3.2 SOC Check 51
6.3.3 Cables Inspection 51
6.3.4 Balancing 51
6.3.5 Output Relay Inspection 51
6.3.6 History Inspection 51
6.3.7 Shutdown and Maintenance 51
6.3.8 Recycle 52

7. REMARKS 53

7.1 Storage 53
7.2 Capacity Expansion 53

8. SHIPMENT 53

ANNEX 1: INSTALLATION AND SYSTEM POWER ON PROCESS LIST 54

ANNEX 2: SYSTEM POWER OFF PROCESS LIST 55

1.SAFETY

The Li SV 3 is a high voltage DC system, operated by skilled/qualified personnel only. Read all safety instructions carefully prior to any work and observe them at all times when working with the system.

Incorrect operation or work may cause:

- injury or death to the operator or a third party;
- damage to the system hardware and other properties belonging to the operator or a third party.

Skills of Qualified Personnel:

Qualified personnel must have the following skills:

- training in the installation and commissioning of the electrical system, as well as the dealing with hazards;
- knowledge of this manual and other related documents;
- knowledge of the local regulations and directives.

1.1 SYMBOLS

	Danger	**Deadly voltage!** • Battery cables generate high DC power and can cause lethal voltage and electric shock. • The wiring of the battery cables may only be carried out by a qualified person.
	Danger	Lethal voltage! • Battery strings will produce HIGH DC power and can cause a lethal voltage and an electric shock. • Only qualified person can perform the wiring of the battery strings.
	Warning	Risk of battery system damage or personal injury. • Do not pull out the connectors while the system is working! • De-energize from all multiple power sources and verify that there is no voltage.
	Caution	Risk of battery system failure or life cycle reduces.
	Symbol in label	Read the product and operation manual before operating the battery system!
	Symbol in label	Danger! Safety!
	Symbol in label	Warning electric shock!
	Symbol in label	Do not place near flammable material.

	Symbol in label	Do not reverse connection the positive and negative.
	Symbol in label	Do not place near open flame.
	Symbol in label	Do not place at the children and pet touchable area.
	Symbol in label	Recycle label.
	Symbol in label	Label for Waste Electrical and Electronic Equipment (WEEE) Directive (2012/19/EU).
	Symbol in label	The certificate label for EMC.
	Symbol in label	The certificate label for Safety by TÜV SÜD.
	Symbol in Label	The certificate label for safety from TÜV Rheinland.
	Symbol in Label	The certificate label for safety from TÜV Rheinland.

1.2 GENERAL SAFETY INSTRUCTIONS

Danger: Batteries deliver electric power, resulting in burns or a fire hazard when they are short circuited, or wrongly installed.

Danger: Lethal voltages are present in the battery terminals and cables. Severe injuries or death may occur if you touch the cables and terminals.

Warning: DO NOT open or deform the battery module, otherwise the product will be out of warranty scope.

Warning: Whenever working on the battery, wear suitable personal protective equipment (PPE) such as rubber gloves, rubber boots and goggles.

Warning: Li SV 3 system working temperature range: -10℃~55℃; Optimum temperature: 18℃~28℃. Out of the working temperature range may cause the battery system over / low temperature alarm or protection which will further lead to the cycle life reduction. It will affect the warranty terms as well.

Warning: For battery installation, the installer shall refer to NFPA70 or similar local installation standard for operation.

Caution: Improper settings or maintenance can permanently damage the battery.

Caution: Incorrect inverter parameters will lead to a further faulty/damage to battery.

Reminding:

1. It is very important and necessary to read the user manual carefully before installing or using the battery. Failure to do so or to follow any of the instructions or warnings in this document can result in electrical shock, serious injury, death, or can damage battery, potentially rendering it inoperable.
2. If the battery is stored for long time, it is required to charge them every six months, and the SOC should be no less than 90%.
3. Battery needs to be recharged within 12 hours, after fully discharged.
4. Do not expose cable outside.
5. Please keep the battery away from radiation environment installation.
6. Please avoid installing batteries in earthquake-prone areas.
7. Please keep the battery away from corrosive gases and liquid areas.
8. Please keep the battery away from the ocean or wet areas.
9. In the battery installation area, please reserve a safe escape route and indicate it with a symbol.
10. This device is not equipped with a fire alarm system, please prepare yourself with a smoke alarm in the battery installation area.

1.3 SAFETY INSTRUCTIONS BEFORE CONNECTING THE BATTERY

Caution:

1. After unpacking, please check product and packing list first, if the product is damaged or lack of parts, please contact the local retailer.
2. Before installation, be sure to cut off the grid power and make sure the battery is in the switched-off mode.
3. Wiring must be correct, do not mistake the positive and negative cables, and ensure no short circuit with the external device.
4. DO NOT connect the battery with AC power directly.
5. Battery system must be well grounded and the resistance must be less than 100mΩ.
6. Please ensure the electrical parameters of battery system are compatible to related equipment.
7. Keep the battery away from water and fire.

1.4 SAFETY INSTRUCTIONS IN USING THE BATTERY

Caution:

1. If the battery system needs to be moved or repaired, the power must be cut off and the battery is completely shut down in advance.
2. DO NOT connect the battery with other different type of battery.
3. DO NOT let the batteries work with faulty or incompatible inverter.
4. DO NOT disassemble the battery (QC tab removed or damaged).
5. In case of fire, only dry powder fire extinguisher can be used. DO NOT use liquid fire extinguishers.

2. SYSTEM INTRODUCTION

2.1 PRODUCT INTRODUCTION

Li SV 3 is a high voltage battery storage system based on lithium iron phosphate battery, which is one of the new energy storage products developed and produced by AXITEC. It can be used to provide reliable power for various types of equipment and systems. Li SV 3 enables multiple strings parallel operation feature, which provides tremendous flexibility in system design and configuration. Li SV 3 is especially suitable for those application scenes which require flexible capacity extension, high power output, limited installation space, restricted load-bearing and long cycle life.

2.2 SPECIFICATIONS

***NOTE*:** The above picture is just for reference. The quantity of the battery modules is based on your practical system.

2.2.1 SYSTEM PARAMETERS

2.2.1.1 SINGLE STRING SYSTEM PARAMETERS

Product Type	Li SV 3					
Battery System Capacity(kWh)	10.24	15.36	20.48	25.6	30.72	35.84
Battery System Voltage (VDC)	204.8	307.2	409.6	512	614.4	716.8
Battery System Capacity (Ah)	50					
Battery Controller Model	AXIstorage Li SV 3 BMS					
Battery Module Model	AXIstorage Li SV 3 Energypack					
Battery Module Quantity (pc)	**2**	**3**	**4**	**5**	**6**	**7**
Battery Module Capacity(kWh)	5.12					
Battery Module Voltage (VDC)	102.4					
Battery Module Capacity (Ah)	50					
Battery System Charge Upper Voltage (VDC)	227.2	340.8	454.4	568	681.6	795.2
Battery System Charge Current (Amps, Standard)	10					
Battery System Charge Current (Amps, Rated)	50					
Battery System Charge Current (Amps @15minutes)	55					
Battery System Discharge Lower Voltage (VDC)	185.6	278.4	371.2	464	556.8	649.6
Battery System Discharge Current (Amps, Standard)	10					
Battery System Discharge Current (Amps, Rated)	50					

Product Type	Li SV 3					
Battery System Discharge Current (Amps, maximum @ 15 minutes)	55					
Short circuit rating (Amps/millisecond)	4500 Amps /1 millisecond					
Efficiency (% at 0.5C-rate)	96					
Depth of Discharge (%)	95					
Dimension (W x D x H, mm)	540 x 350 x 530	540 x 350 x 700	540 x 350 x 870	540 x 350 x 1040	540 x 350 x 1210	540 x 350 x 1380
Communication	CANBUS/Modbus RTU					
IP Rating/ Protection Class	IP65/I					
Pollution Degree	PD3					
Weight (kg)	92	131	170	209	248	287
Design Life (year)	15+					
Operation Temperature (℃)*	-10 ~ 55					
Storage Temperature (℃)	-20 ~ 60					
Altitude(m)	<4000					
Humidity (%, RH)	5 ~ 95					
Product Certificate	UL1973, EC62619, IEC63056, VDE-AR-E 2510-50 UL9540A, CE RED, CE LVD					
Transfer Certificate	UN38.3					
Environmental certification	RoHS, Reach, WEEE					
Single Battery Controller Dimensions (mm)	540(W) x 350(D) x150(H)					
Single Battery Module Dimensions (mm)	540(W) x 350(D) x 170(H)					
Battery bottom base Dimensions (mm)	540(W) x 350(D) x 40(H)					

* In high(>40℃) or low temperature (<10℃) environment, the charging and discharging power of the battery system will be limited according to BMS operation logic.

2.2.1.2 MULTI-STRINGS SYSTEM PARAMETERS (MAXIMUM 6 STRINGS PER SYSTEM)

For multi-strings operation, please make sure:

- the battery type in the whole system is the same;
- the battery amount of each string is the same.

●....Product Type	Li SV 3 in multi-strings				
Battery System Voltage (VDC)*	204.8 / 307.2 / 409.6 / 512 / 614.4				
Battery System string amount(pcs)	**2**	**3**	**4**	**5**	**6**
Battery System capacity (Ah)	100	150	200	250	300
Battery System Operation Current (Amps, Standard)	20	30	40	50	60
Battery System Operation Current (Amps, Normal)	80	120	160	200	240
Battery System Operation Current (Amps, maximum @ 15 minutes)	110	165	220	275	330
P-Combiner 3/6-V2 Operation Current (Amps, Normal)	50**		100♣		
P-Combiner 3/6 Operation Current (Amps, maximum @ 15 seconds)	80**		160♣		

*The Battery System Voltage varies depending on battery amount in serial per string.

**The current is based on BMS theoretical operation current. If using P-Combiner 3-V2 as the combiner box of the multi-strings` battery system wiring connection, the maximum continuous operation current is 50 Amps, maximum peak operation current is 80 Amps for 15 seconds. Please make sure the real operation current not exceed the combiner box power rating.

♣ The current is based on BMS theoretical operation current. If using P-Combiner 6-V2 as the combiner box of the multi-strings` battery system wiring connection, the maximum continuous operation current is 100 Amps, maximum peak operation current is 160 Amps for 15 seconds. Please make sure the real operation current not exceed the combiner box power rating.

IMPORTANT: DO NOT use P-Combiner-HV-3/6-V2 or similar concept of multi-strings connection method in case the multiple battery strings need to be operated independently.

2.2.2 BATTERY MODULE SPECIFICATIONS (ENERGYPACK SV3)

2.2.2.1 BATTERY MODULE PARAMETERS

Producttyp	Energypack SV3
Cell Technology	Li-ion (LFP)
Battery Module Capacity (kWh)	5.12
Battery Module Voltage (VDC)	102.4
Battery Module Capacity (Ah)	50
Battery Module Serial Cell Quantity (pc)	32
Battery Cell Voltage (VDC)	3.2
Battery Cell Capacity (Ah)	50
Dimension (W x D x H, mm)	540 x 350 x 170
Weight (kg)	39
Operation Life (year)	15+
Operation Cycle Life (cycle) *	8,000
Operation Temperature (℃) **	-10 ~ 55
Storage Temperature (℃)	-20 ~ 60
Transfer Certificate	UN38.3

* Die Lebensdauer ist abhängig von den spezifischen Betriebsbedingungen, für weitere Details wenden Sie sich bitte an das AXITEC Service Team.

** In Umgebungen mit hohen (>40℃) oder niedrigen Temperaturen (<10℃) wird die Lade- und Entladeleistung des Batteriesystems entsprechend der BMS-Betriebslogik begrenzt.

2.2.3 CONTROL MODULE SPECIFICATIONS

2.2.3.1 CONTROL MODULE PARAMETERS

Product model	LI SV 3 BMS
Related Product	Li SV3 Energypack
Controller Working Voltage (VDC)	80 - 1000
System Operation Voltage (VDC)	172.8 - 921.6
Charge Current (Amps, maximum @ 15 minutes)	55
Discharge Current (Amps, maximum @ 15 minutes)	55
Self-consumption (W)	＜16
Dimension (W x D x H, mm)	540 x 350 x 150
Weight (kg)	12
Communication Protocol	CANBUS/Modbus RTU
Operation Life (year)	15+
Operation Temperature (℃)	-10 - 55
Storage Temperature (℃)	-20 - 60

2.2.3.2 CONTROL MODULE DISPLAY PANEL

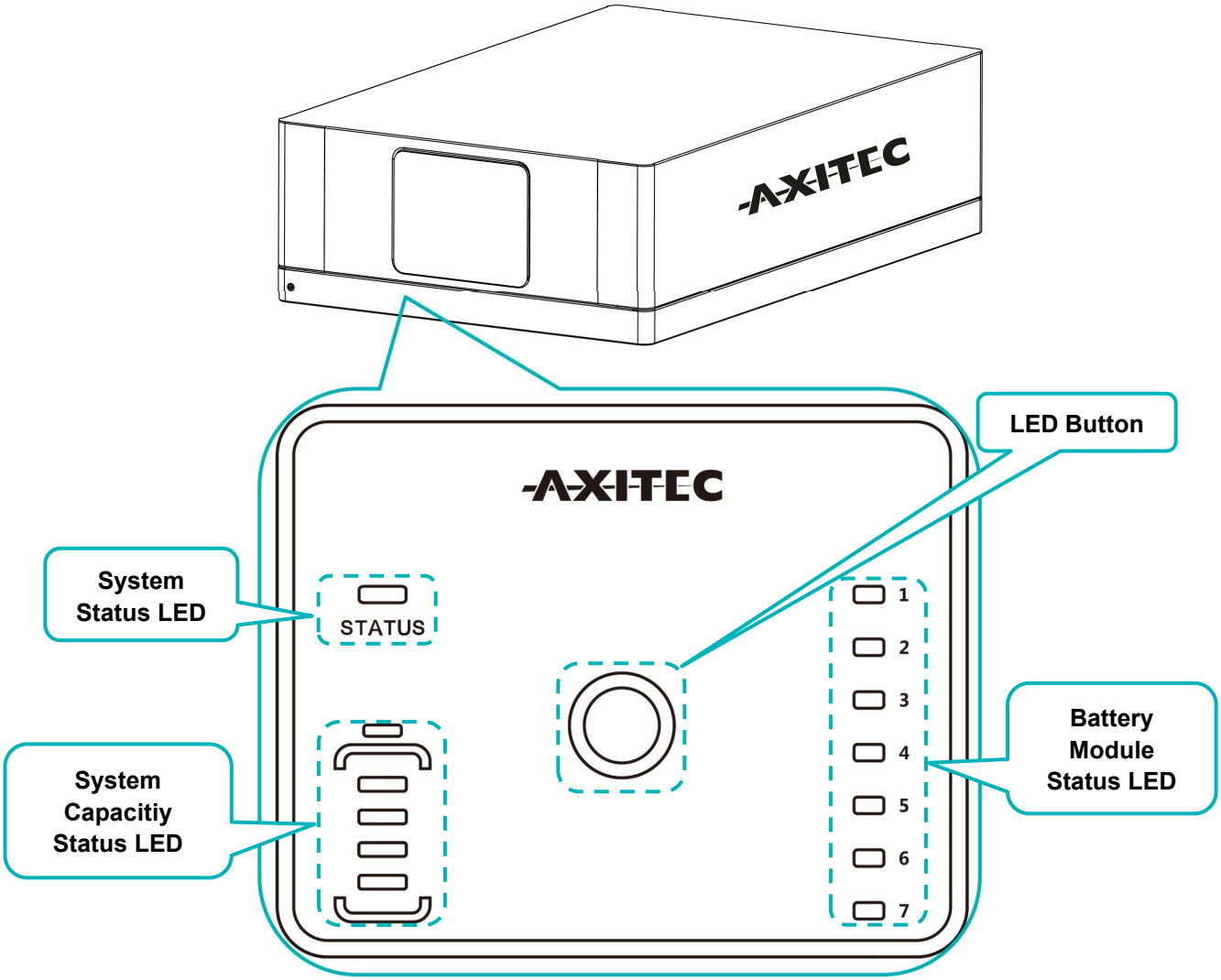

LED Button

Button	Action	Instructions
	Short Press	Display the LED panel for 20 seconds.
	Long Press 1 (about 5~10 seconds)	(1) When System Status LED fast flashes blue, release the button, then it is 115200 baud rate of RS485. (2) When System Status LED fast flashes orange, release the button, then it is 9600 baud rate of RS485. (3) If a special protocol (except AXITEC Protocol) is selected, follow 'Long Press 2', then the baud rate changing described here is ineffective.
	Long Press 2 (>10 seconds)	Communication Protocol Selection, for details please check with AXITEC service team. Communication Protocol Selection Guidance

Status LED

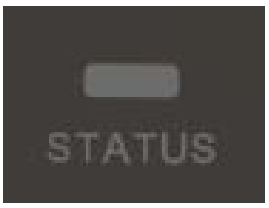		Refer to descriptions of the LED Indicators Instructions below.

Battery Module Status LED

	AXITEC 1 2 3 4 5 6 7	Blue light	Normal
		Orange light	Individual module alarm or protection occurs. See trouble shooting steps in *section 6.1.*

Instructions:

(1) Each Status LED (1~7) represents one individual battery module from number 1 (the one right beneath the control module) to number 7 (the one next to the base), as shown in the above illustration.

(2) If your system has less than 7 battery modules, the Status LED without corresponding battery will be always OFF.

System Capacity Status LED

	Indicates the system SOC. Each LED indicates 25%SOC

LED Indicators Instructions

Status	STATUS		Remark
Self-checking	Blue, Flashing*	All flashing*	
Self-checking failure	Orange, Slow flashing**	Off	See trouble shooting steps in *section 6.1.*
Black start success	Blue, fast flashing⁂	Off	
Black start failure	Orange, fast flashing⁂	Off	See trouble shooting steps in *section 6.1*.
Communication Lost or BMS error	Orange, solid	Indicating SOC, Blue, solid	See trouble shooting steps in *section 6.1*.
Idle	Blue, slow flashing**	Indicating SOC, Blue, solid	
Charge	Blue, solid	Indicating SOC, blue, solid	
Floating charge	Blue, solid	All flashing, horse race lamp	
Discharge	Blue, flashing*	Indicating SOC, blue, solid	
System sleep	Blue, flashing*	Off	Battery module status off.

*Flashing: 0.5s ON/0.5s OFF.

**Slow flashing: 2.0s ON/1.0s OFF.

⁂ Fast flashing: 0.1s ON/0.1s OFF.

2.2.3.3 CONTROL MODULE INTERFACE PANEL

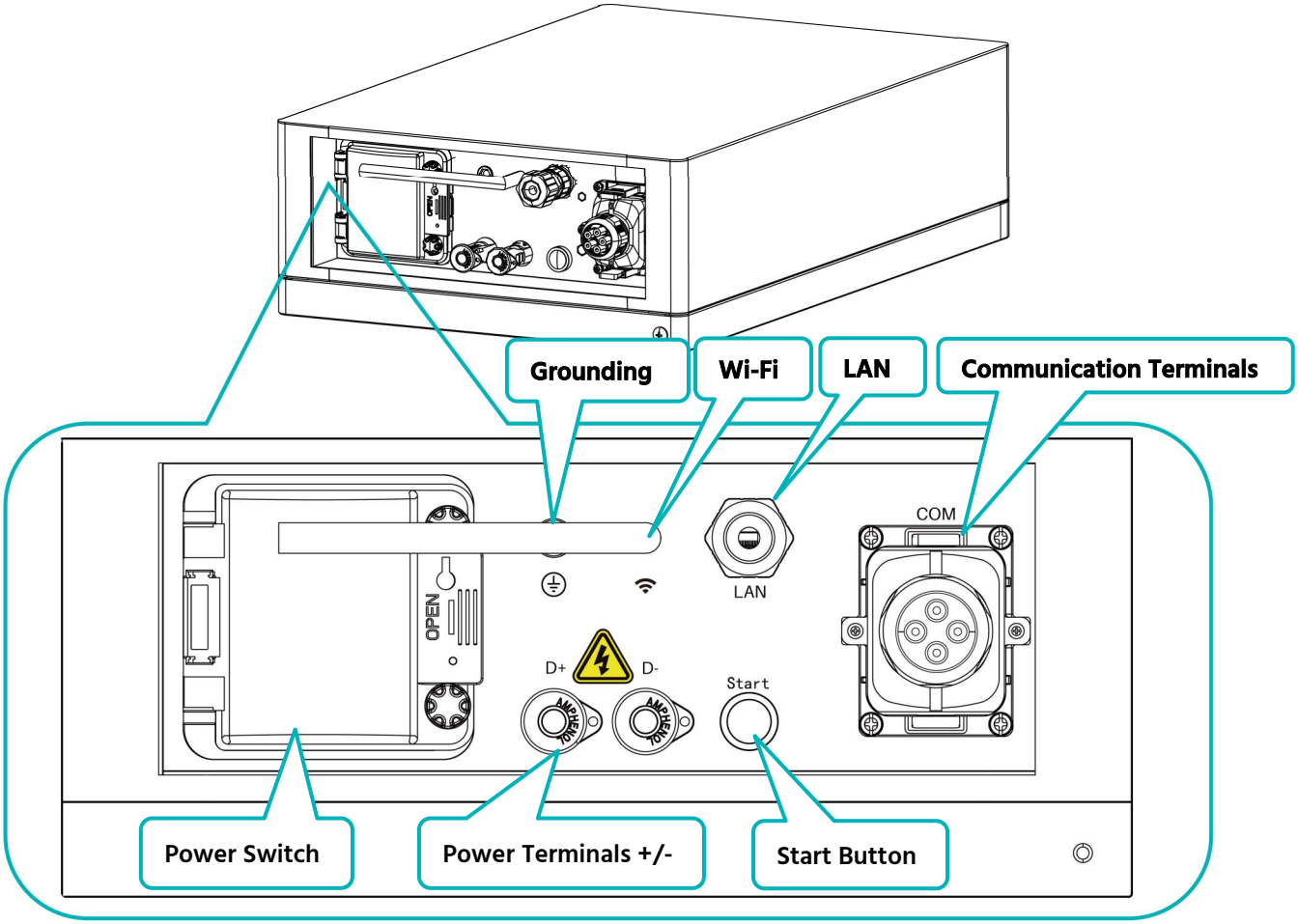

Power Switch (under the protection cover)

ON: Power Switch ON, able to turn on battery system by Start Button.

OFF: Power Switch OFF, able to turn off system completely, no power output.

Caution: If the power switch is tripped off due to over current or short circuit, be sure to wait more than 30 minutes, then you can turn it on again; otherwise it may cause damage to the switch.

NOTE: After using the power switch, lock the protection cover by tightening the two screws on the cover to make it water-proof.

Start

Caution:

Start button: press this button and hold more than 5 seconds until the buzzer rings to turn on the controller.

Multi-strings starting sequence: please start up the last string (from communication structure, the last slave string, see the table blow) of battery system first, one by one to the first string which shall be started up lastly. Details as below table.

Communication Structure	Starting Sequence
Master string*	Last Start up
Slave string 1	5th Start up
Slave string 2	4th Start up (if has)
Slave string 3	3rd Start up (if has)
Slave string 4	2nd Start up (if has)
Slave string 5	1st Start up (if has)

* BMS of the rack with Link Port 0 EMPTY is defined as the Master string, which communicates with the inverter or upper controller. In one system, there's ONLY ONE Master string, the rest are defined as the slave strings.

Black start function: When the system is turned on, and relay is OPEN, press the Start Button more than 20 seconds. Then relay will be CLOSE for about10 minutes without communication (depending on conditions).

Multi-strings Black Start: Black start operation is ONLY needed to be performed on Master string. And it will close circuit for one of the strings within the system for 10 minutes. The slave string black start function is ONLY controlled by master string.

Wi-Fi

Basic Information of Wi-Fi	
Wireless maximum Output Power	<20dBm
Operating frequency	2412-2472MHz
Gain of antenna	2.5dBi
Modulation system	DBPSK/DQPSK/CCK(DSSS) BPSK/QPSK/16QAM/64QAM(OFDM)
Modulating Repetition	1Mbps/2Mbps/5.5Mbps/11Mbps (DSSS) 6Mbps/9 Mbps/12 Mbps/18 Mbps/24 Mbps/36 Mbps/48 Mbps/54 Mbps (OFDM) MCS0~MCS7 (802.1 1n 20MHz)
Channel spacing	5MHZ
Type of antenna	2.4G IPEX-SMA Antenna

NOTE: For network connection, please scan the QR code below to get Network Connecting Instructions or contact AXITEC service team for further questions.

Power Terminal (+/-)

Connect power cables of battery system with inverter.

During multi-strings operation, you can select P-Combiner-HV-3-V2 (up to 3 strings, maximum 50 Amps) or P-Combiner-HV-6-V2 (up to 6 strings, maximum 100 Amps) for connection.

For more details of P-Combiner, please check with your distributor or AXITEC service team.

Communication Terminals (RS485 / CAN / RS232/Link0/Link1)

NOTE: Before connecting the communication terminals, loosen the two screws on the cover as follows, then you will see the communication terminal as follows. Following instructions are for your reference:

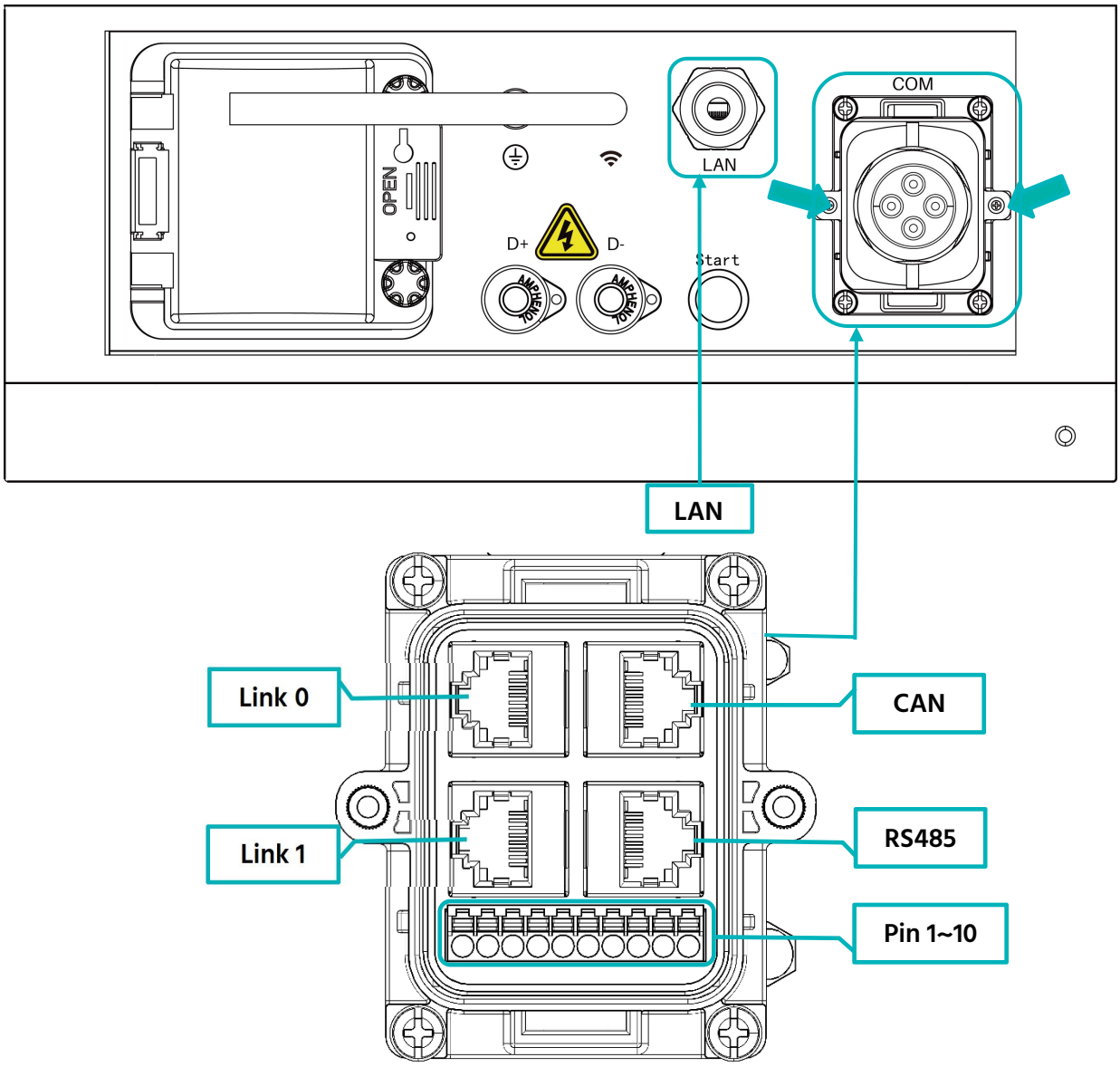

LAN: Used for where the Wi-Fi signal is not good or there is no Wi-Fi. To connect to the online portal directly through a network cable (another side to the internet router).

Link0/Link1 Communication Terminal: (RJ45 port) designed only for multi-strings operation, connecting from the first BMS Link 1 to the second BMS Link 0, then from the second BMS Link 1 to the third BMS link 0 (if has), all the way to the last BMS Link 0. The BMS with Link Port 0 EMPTY is defined as the Master string, which communicates with the inverter or upper controller.

***NOTE*:** For multi-strings operation, please firstly make sure the communication cables between multiple BMSs are properly connected between Link 1 and Link 0, prior to the startup process.

CAN Communication Terminal: (RJ45 port) follows CAN protocol, for communication between battery system and inverter.

RS485 Communication Terminal: (RJ45 port) follows MODBUS 485 protocol, for communication between battery system and inverter.

Definitions of RJ45 Port PIN

No.	CAN	RS485
1	---	---
2	GND	---
3	---	---
4	CANH	---
5	CANL	---
6	---	---
7	---	RS485A
8	---	RS485B

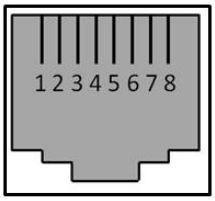

RJ45 Port

RJ45 Plug

Pin 1~10 Assignment Table:

1	2	3	4	5	6	7	8	9	10
-	+	GND	H	L	IN+	IN-	TX	RX	GND
E-Stop		CAN					RS232		

E-STOP: Emergency stop feature is default inactivated. If you need to use such function, please contact AXITEC service team.

RS232 Communication Terminal: for manufacturer or professionals to debug or service.

A. If you have RS232 debug tool (DB9 – USB – RJ45) provided by AXITEC before, PIN8~10 here corresponds to PIN3, PIN6 and PIN8 of RJ45.

PIN 1-10	RJ45
PIN 8	PIN 3 (Green and white)
PIN 9	PIN 6 (Green）
PIN10	PIN 8 (Brown)

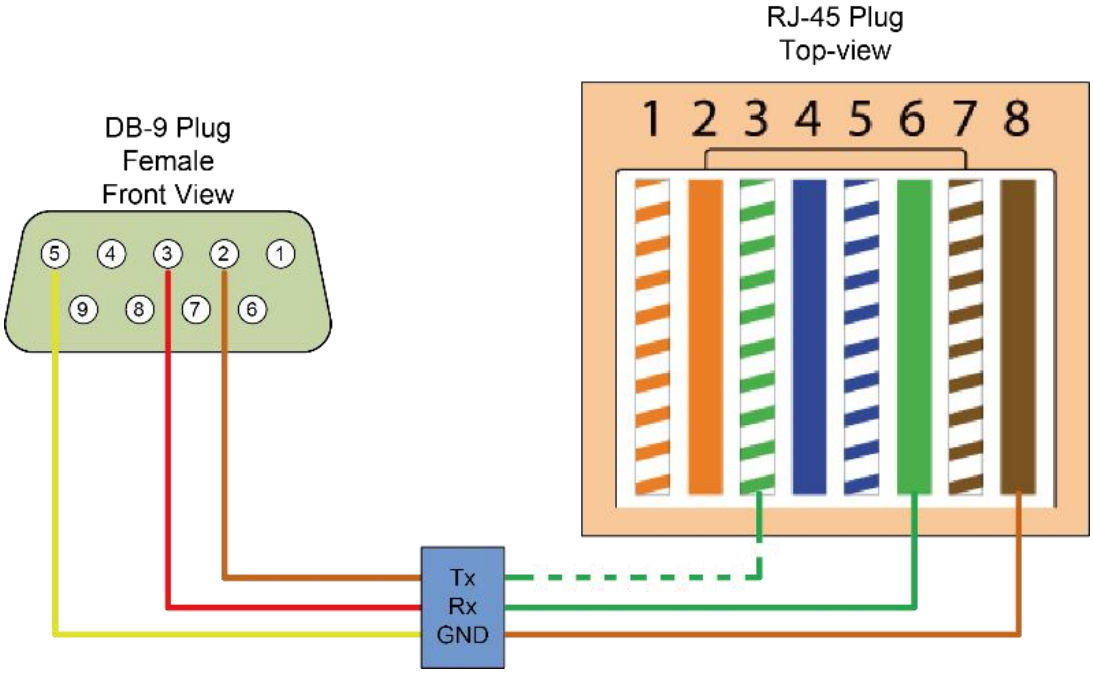

B. If you use a new RS232 debug tool (DB9 – USB), the Pin 8~10 here corresponds to PIN 2,3,5 of DB9 terminal.

PIN 1-10	DB9
PIN 8	PIN2
PIN9	PIN3
PIN10	PIN5

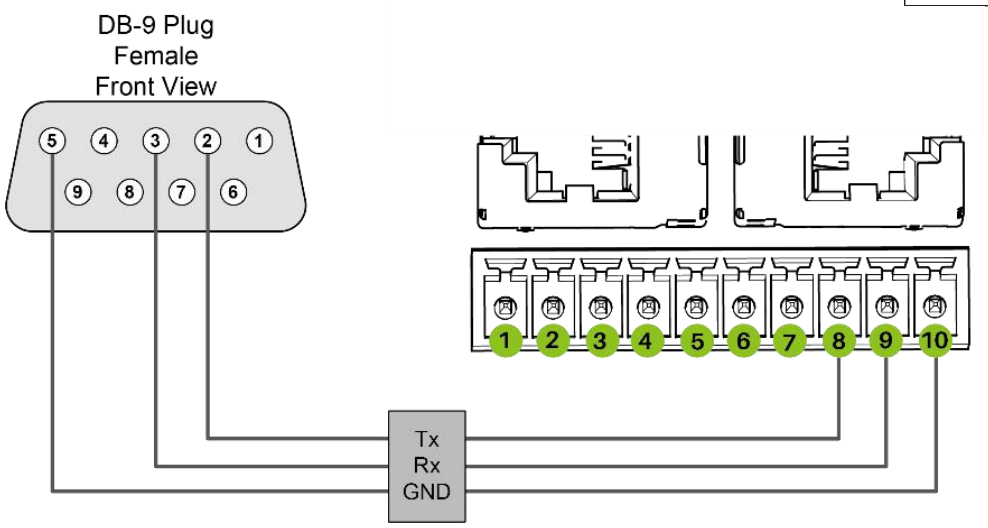

For communication cables connection for PIN1~10 terminal station, please follow the steps below:

1. Loosen the two screws to remove the communication protection cover from the base as shown.

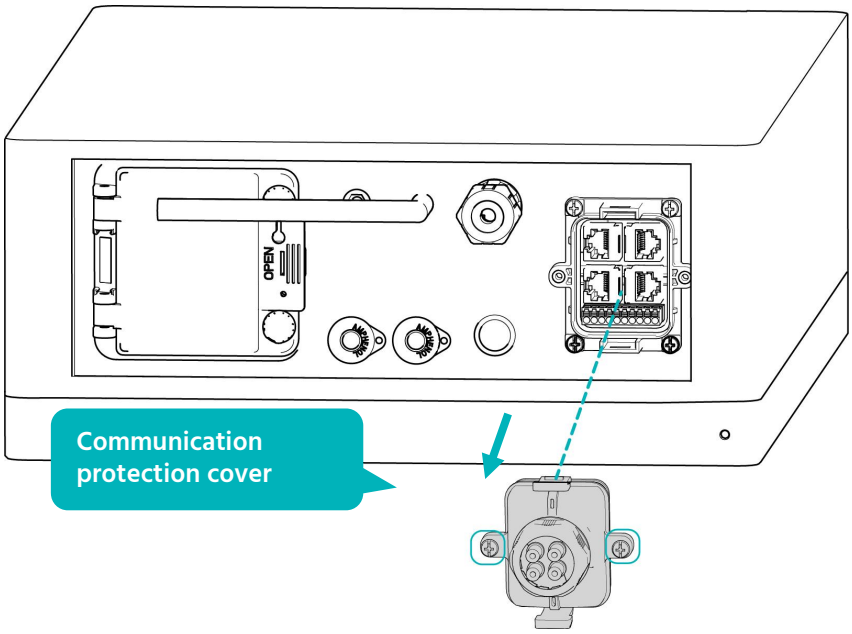

2. Schrauben Sie die Kunststoffmutter von der Abdeckung ab.

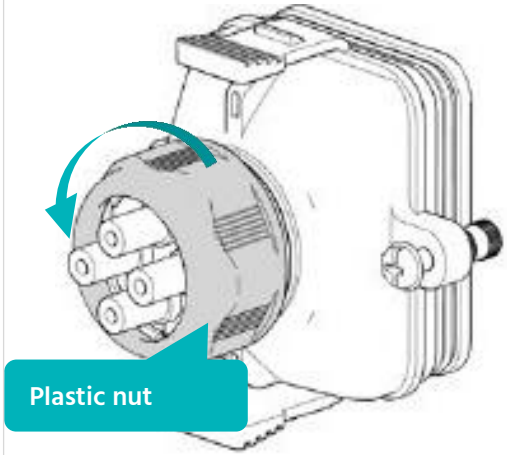

3. Nehmen Sie die Gummistopfen aus der Gummidichtung heraus.

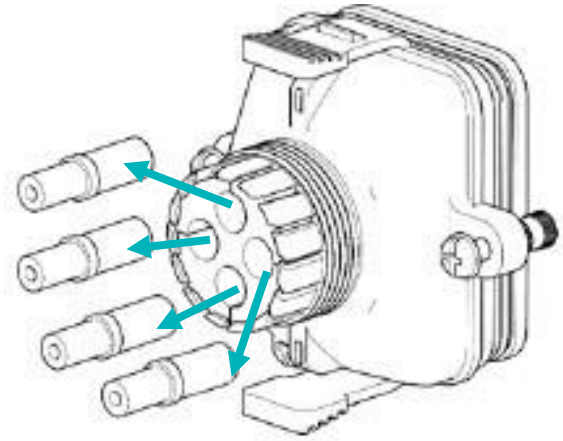

4. Remove the sealing rubber gasket from the cover.

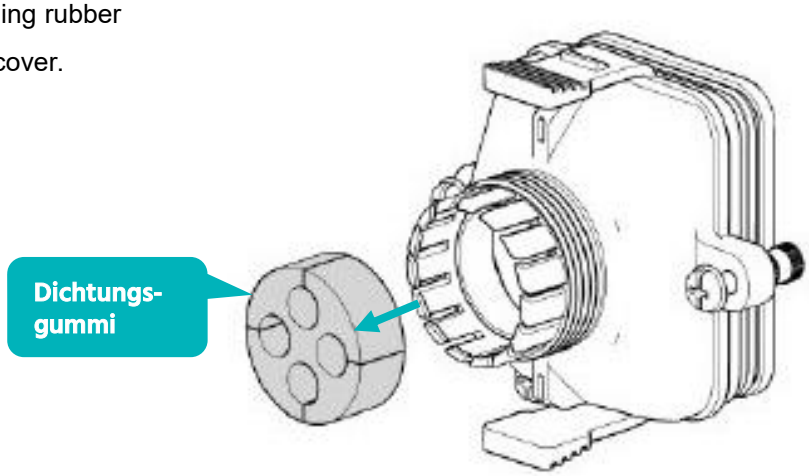

5. Insert the cable into the hole and get it stuck in the sealing rubber gasket.

Caution: Be sure to put the rubber gasket in the correct direction as shown.

DO NOT put the rubber gasket in a reverse direction which will decrease the water resistance of the cover and cause damage to the product.

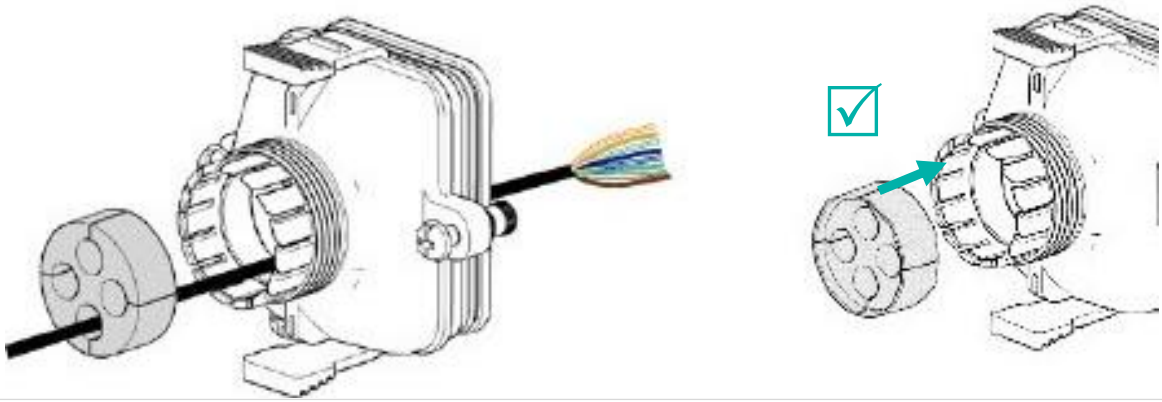

6. Befolgen Sie die Anweisungen der Pin 1~10 Zuordnungstabelle und stecken Sie den Kabelschuh in den entsprechenden Pin des Anschlusssteckers. ** Sie können einen Schraubendreher oder Ihren Finger verwenden, um die Taste zu drücken.

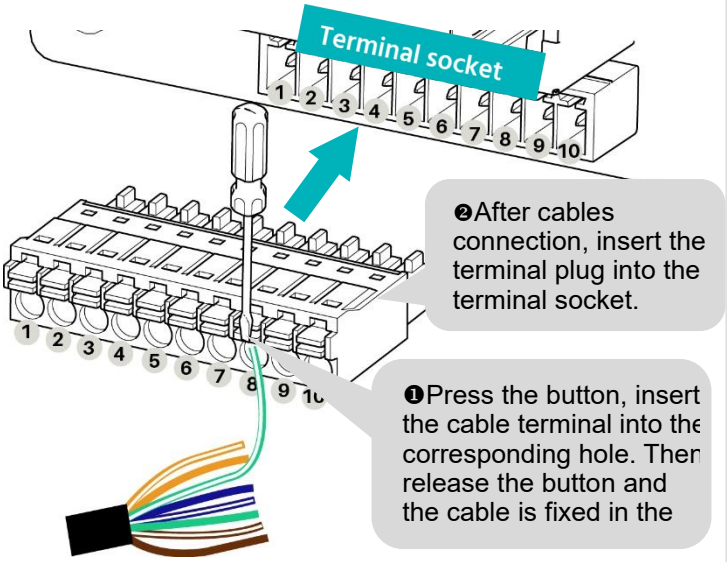

7. After communication cable connection, be sure to install back the rubber gasket into the protection cover. And Insert the rubber plugs in the EMPTY holes of the rubber gasket to guarantee water resistance of the cover.

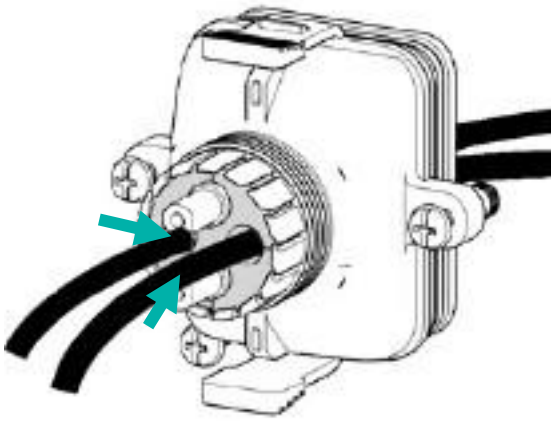

Caution: REMEMBER to screw the plastic nut back to the cover. And fasten the two screws of the protection cover to fix it on the base .

2.3 SYSTEM DIAGRAM

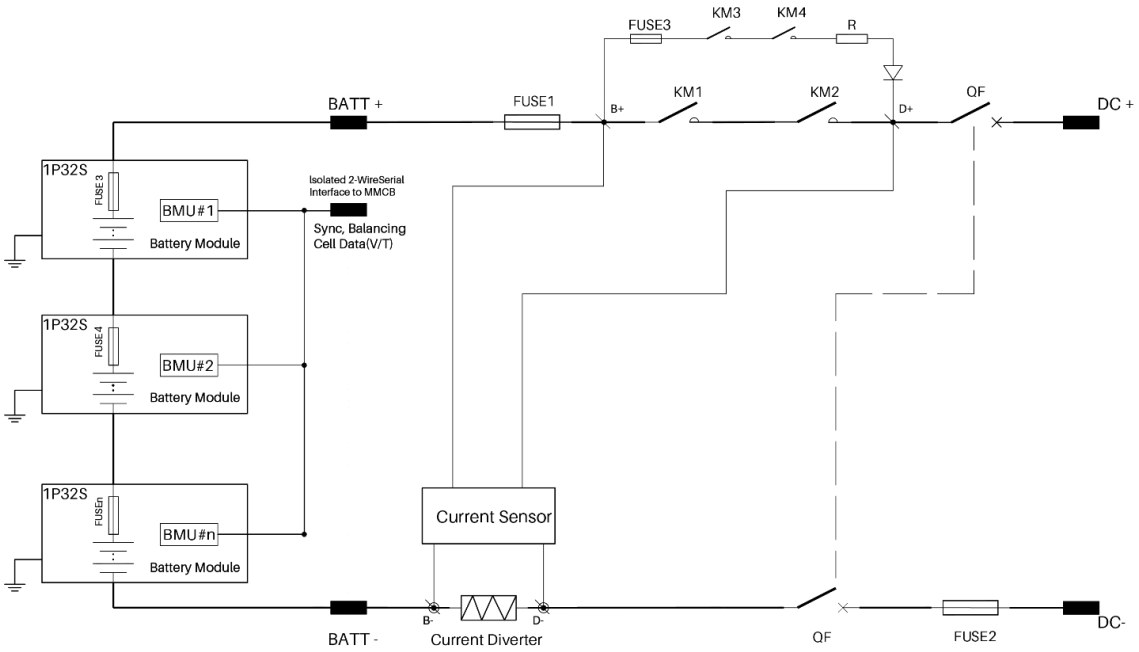

3. INSTALLATION

3.1 Tools

The following tools are required to install the battery pack:

Wire Cutter	**Crimping Modular Plier**	**Cable Ties**
Screw Driver Set	**Electric Screw Driver**	**600VDC Multimeter**
Adjustable Wrench	**Sleeve Piece**	

Note

Use properly insulated tools to prevent accidental electric shock or short circuits.

If insulated tools are not available, cover the entire exposed metal surfaces with available insulated alternatives, except their tips, with electrical tape.

3.2 Safety Gear

Es wird empfohlen, beim Umgang mit dem Akkupack die folgende Schutzausrüstung zu tragen.

Insulated gloves

Safety goggles

Safety shoes

3.3 System Working Environment Checking

3.3.1 CLEANING

Danger: Before installation and system power on, the dust and iron scurf must be removed to keep a clean environment.
The system cannot be installed in desert area without an enclosure to prevent from sand.

Danger: Battery module has active DC power at terminals all the time. Be careful to handle the modules.

3.3.2 TEMPERATURE

Li SV 3 system working temperature range: -10℃~ 55℃; Optimum temperature: 18℃~ 28℃.
There are no mandatory ventilation requirements for battery module, but please avoid of installation in confined area.
The aeration shall avoid high salinity, humidity or temperature.

Caution: The IP rating of Li SV 3 system is IP55. But please avoid frost or direct sunlight. Out of the working temperature range will cause the battery system high / low temperature alarm or protection which will further lead to the cycle life reduction. According to the environment requirements, a cooling system or heating system should be installed when necessary.

3.3.3 FIRE-EXTINGUISHER SYSTEM

Danger: Fire-extinguisher system must be equipped for safety purpose.
The fire system needs to be checked regularly to ensure a normal working status. Regarding to the using and maintenance requirements, please follow local fire equipment guidance.

3.3.4 GROUNDING SYSTEM

Danger: Before the battery installation, make sure the grounding point of the base is stable and reliable.
If the battery system is installed in an independent equipment cabin (e.g. container), the grounding of the cabin must be stable and reliable.
The resistance of the grounding system must be ≤ 100 mΩ.

3.3.5 CLEARANCE

Minimum clearance to heat source shall be more than 2 meters.
Minimum clearance between battery strings shall be more than 0.3 meters.

3.4 Handling And Placement

Warning: The battery pile's power terminals has high DC voltage. It must be installed in a restricted access area;

Warning: Li SV 3 is a high voltage DC system, operated by qualified and authorized personnel only.

3.4.1 Handling And Placement Of The Battery Module

Warning: Single battery module is 39 kg. The battery module must be handled by more than 2 people if there're no handling tools.

3.4.2 Handling And Placement Of The Base

The weight of the base is light, which a single person can handle with.

3.4.3 Requirements Of Installation Site

A. Li SV 3 system working temperature range: -10℃~55℃; Optimum temperature: 18℃~28℃. DO NOT expose the battery system to direct sunlight. It is suggested to build sunshade equipment. In cold area a heating system is required.

B. Li SV 3 system must not be immersed in water. The battery base cannot be exposed to rain or other water sources. As a suggestion, the base's height shall be >300 mm above the ground.

C. The support surface should have sufficient load capacity to support the weight of whole battery system (130~300 kg).

D. Li SV 3 system bust be installed on a fixed and flat support surface.

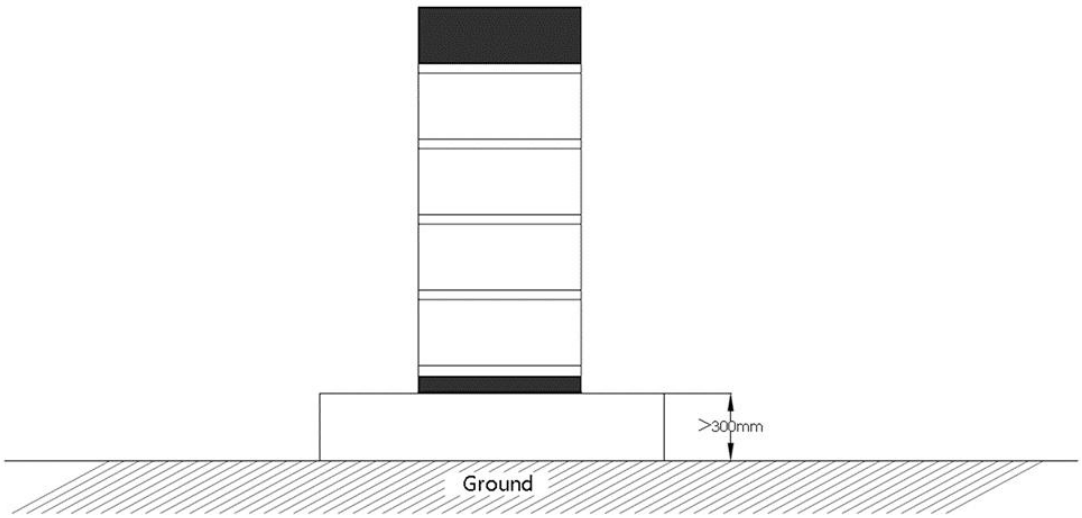

NOTE: The above illustration is just for reference. The quantity of the battery modules is based on your practical system.

3.4.4 Packing List

LI SV3 Battery Controller		
Item	Description	Set
1	FC1000 Battery Controller	1
2	Li SV 3 base (540 x 350 x 40, mm)	1
3	3M black external communication cable (RJ45)	2
4	1.5M black internal communication cable (RJ45)	1
5	3M DC+ red external power cable (8AWG)	1
6	3M DC- black external power cable (8AWG)	1
7	1M yellow-green grounding cable (10AWG)	1
8	M4 screws for fixing brackets	18
9	M8 bolts for fixing base	6
10	M6 screws for fixing ground cable	1
11	Product Manual	1
12	Warranty card	1
13	Qualified Certificate Card	1
14	Communication protocol setup manual	1
15	571.5 mm left bracket For up to 3 battery modules installation	1
16	571.5 mm right bracket For up to 3 battery modules installation	1
17	706.6 mm bracket For up to 4 battery modules installation	2
18	Anti-Toppling Bracket	2
19	M4 screws for fixing the battery module and control module	2
20	Dismantle tool	1
21	Moisture-proof desiccant	1
LI SV3 Battery Module		
1	FH10050 battery module	1
2	Qualified Certificate Card	1
3	Moisture-proof desiccant	1

NOTE: No additional kits are needed for Li SV 3 installation.

3.4.5 Mounting And Installation Of The Battery Rack Base

The base must be fixed securely on the support surface with 4 pcs M8×60 expansion bolts.

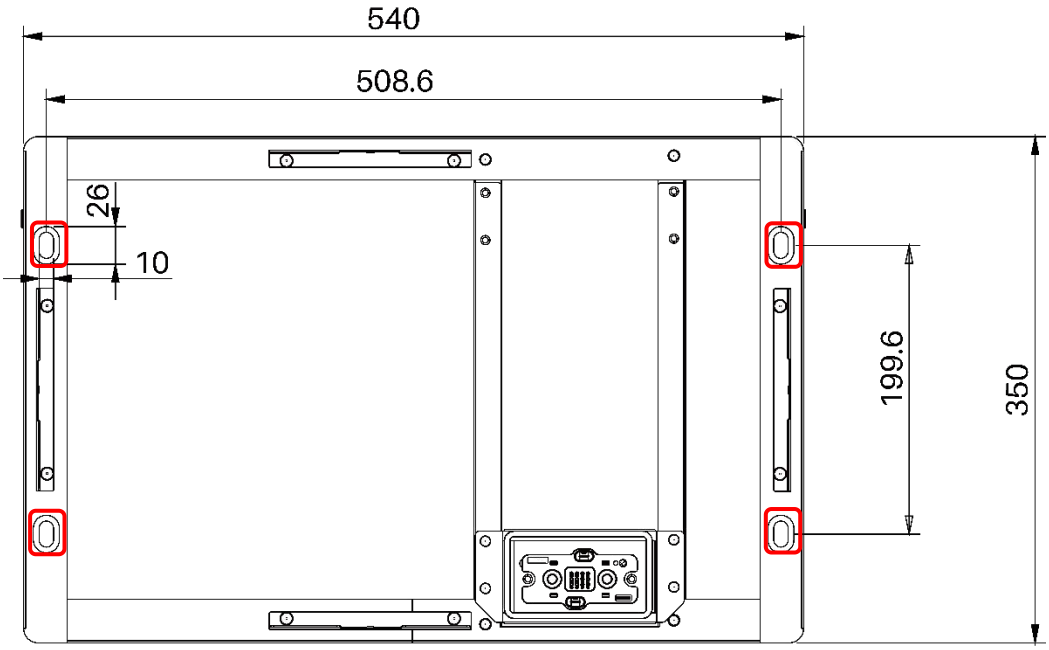

Battery rack base holes' (circled in red) bitmap (unit: mm)

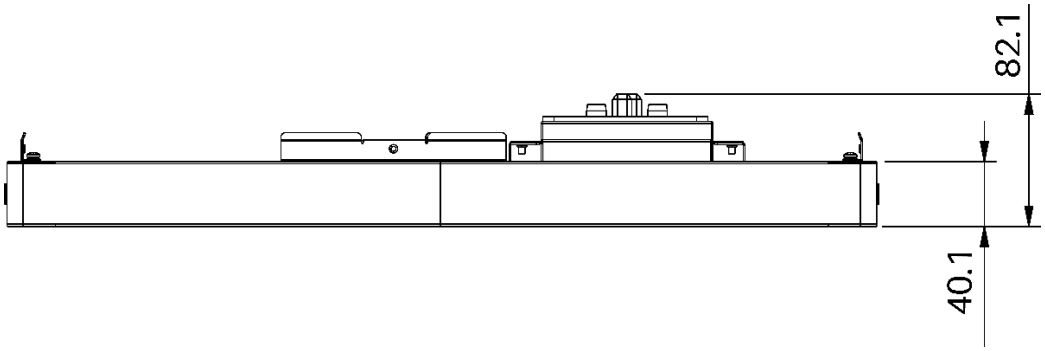

Battery rack base bitmap (unit: mm)

3.4.6 INSTALLATION OF THE BATTERY MODULE ONTO THE BASE

Warning: Single battery module is 39 kg. The battery module must be handled by more than 2 people if there're no handling tools.

1. Lift the two handles on the battery module as blow, making sure the battery not tilting to one side.
2. Adjust to keep the connector of the battery (circled in red) align with the connector of the base (circled in red). Slowly put down the battery, fitting it properly onto the base.
3. Continue to install the left battery modules one by one onto the existing battery.

NOTE: Maximum 7 battery modules to be installed in one system.

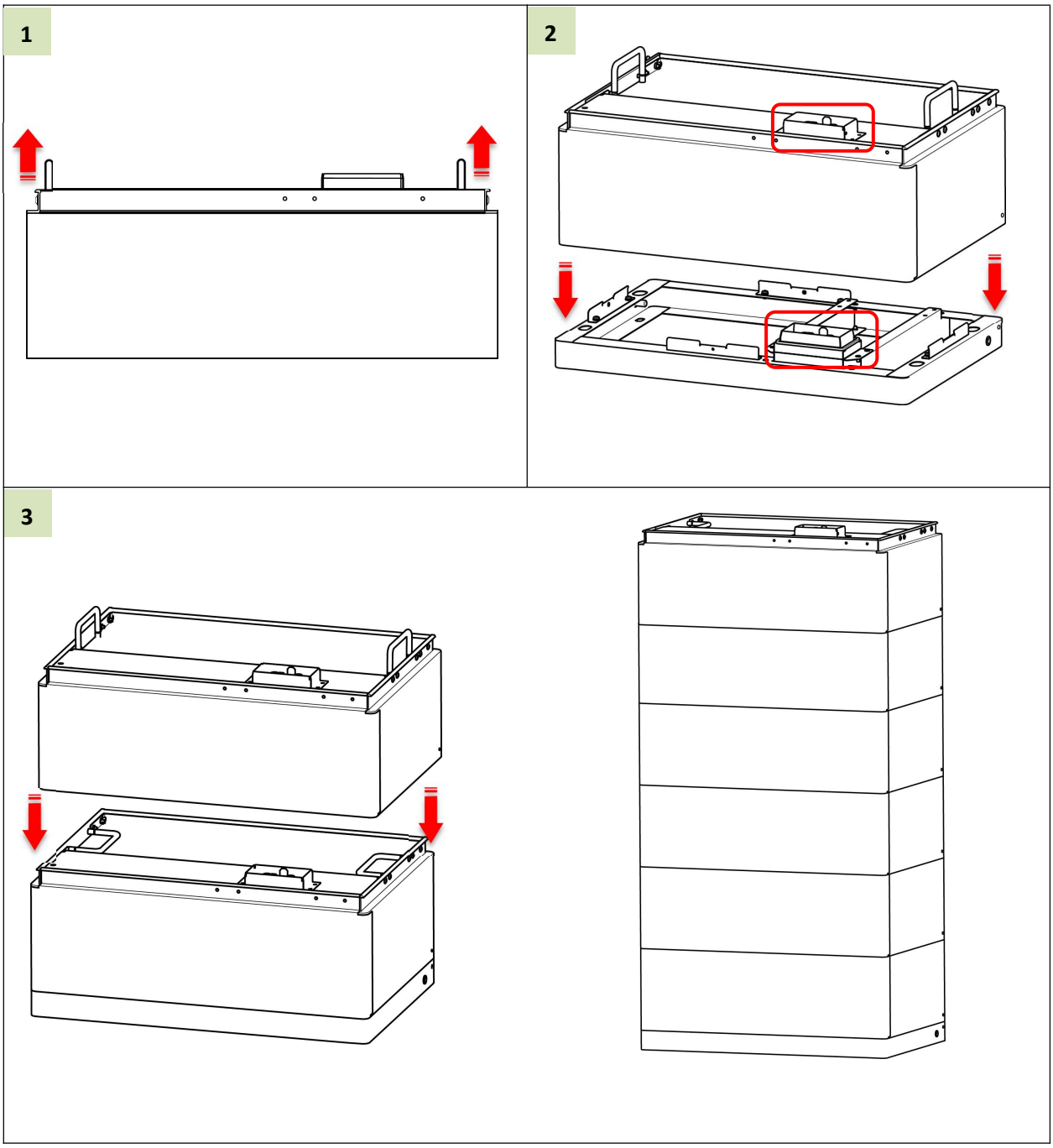

3.4.7 Battery Modules And Control Module (Bms) Pile Up

Danger: When battery is connected together with the base, the internal socket still has high voltage DC power from serial connected battery modules.

1. After installation of the battery module, lift up the control module (BMS), adjusting to make its connector align with the connector of the battery module.
2. Slowly place down the control module (BMS) on the installed battery module.

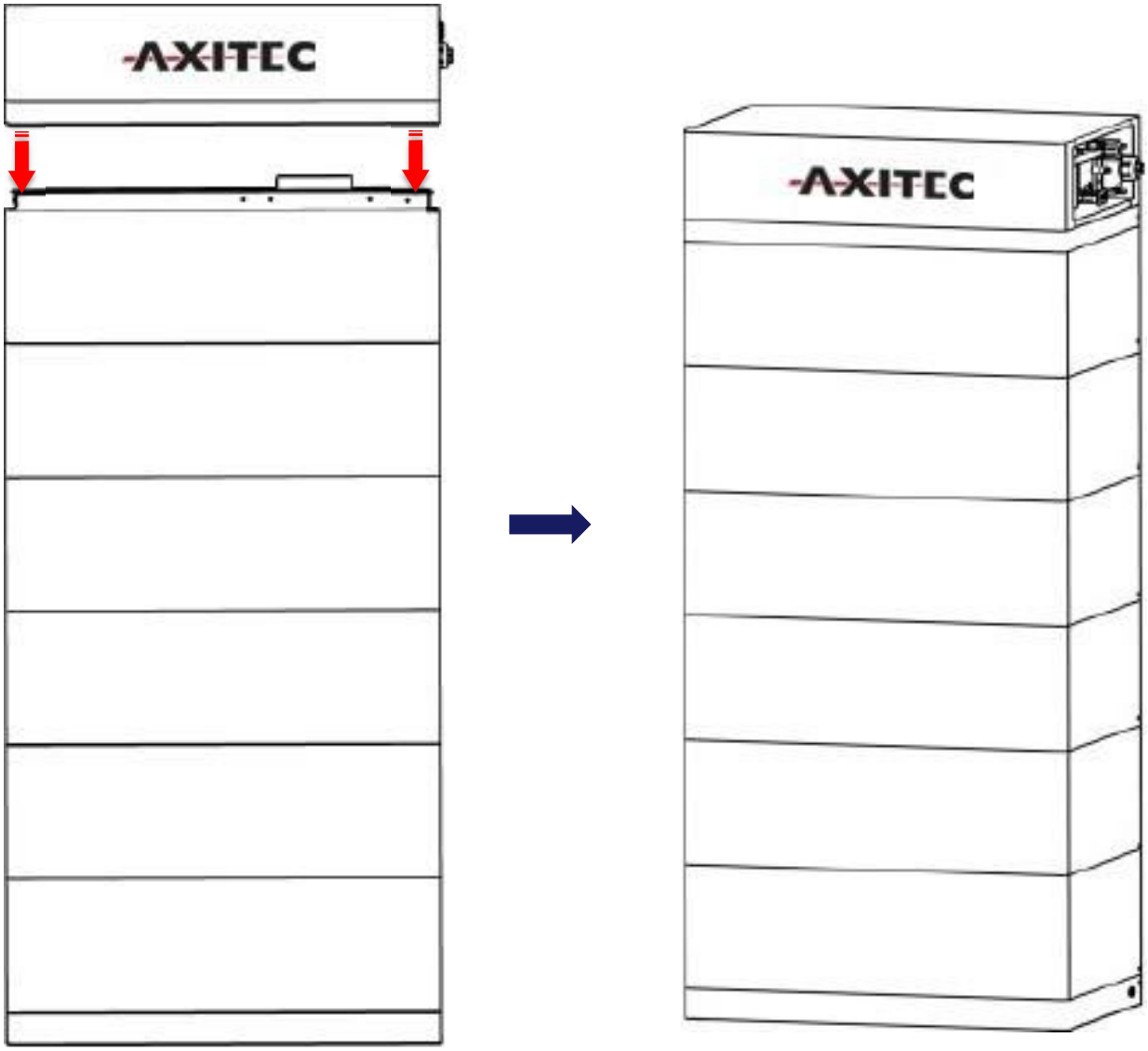

NOTE:The above picture is just for reference. The quantity of the battery modules is based on your practical system.

3.4.8 Installation Of The Metal Brackets For The System

In control module's package, there are 2 pcs short and 2 pcs long metal brackets.

Fix these metal brackets at both back sides of the battery modules (see the illustration on the right).

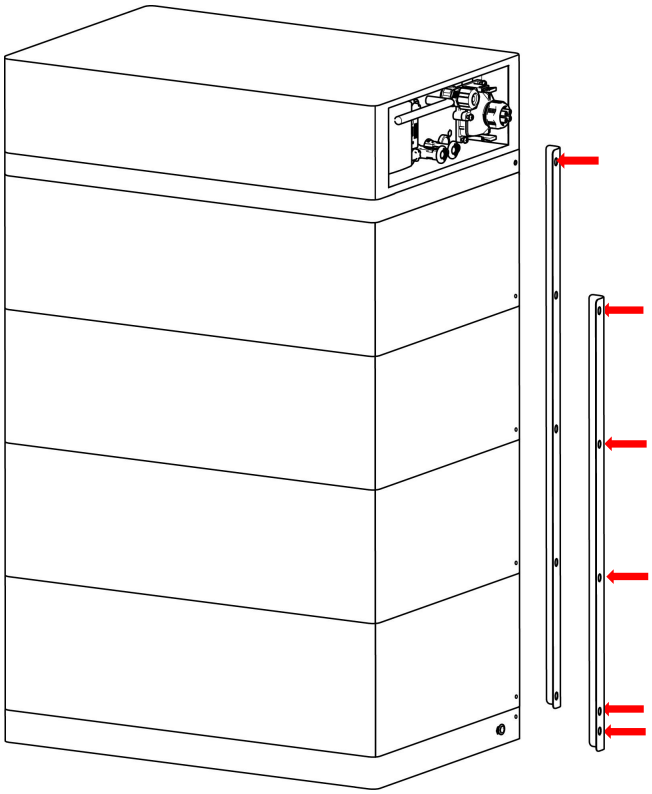

Please follow the illustrations below to install the metal brackets for your practical system.

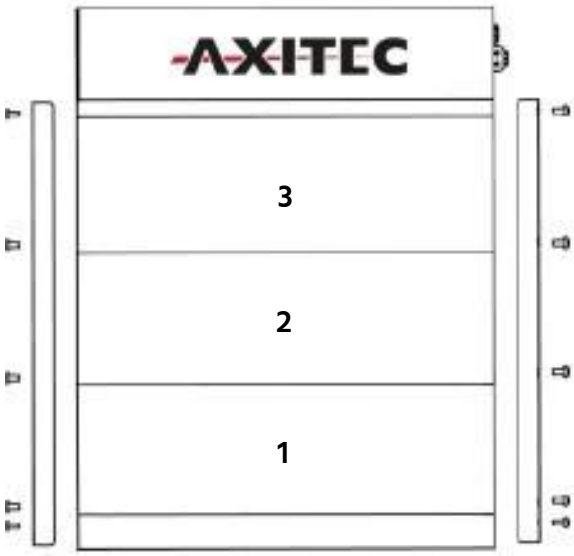

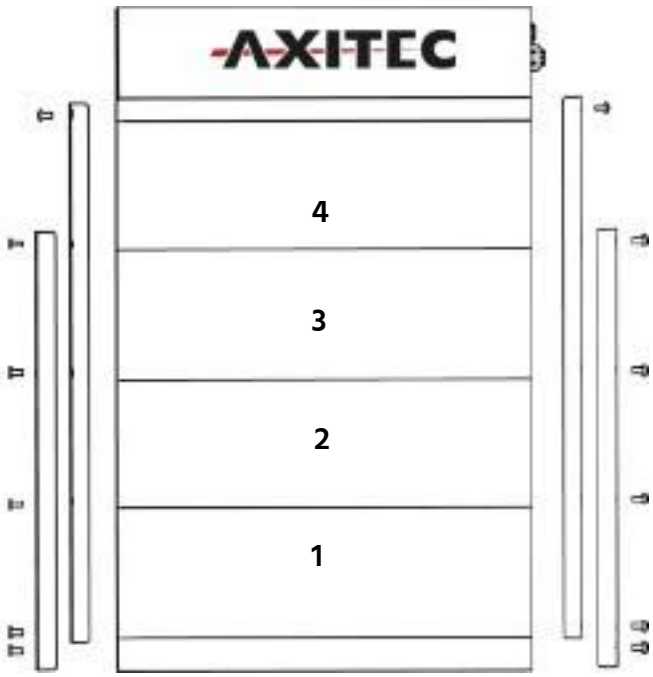

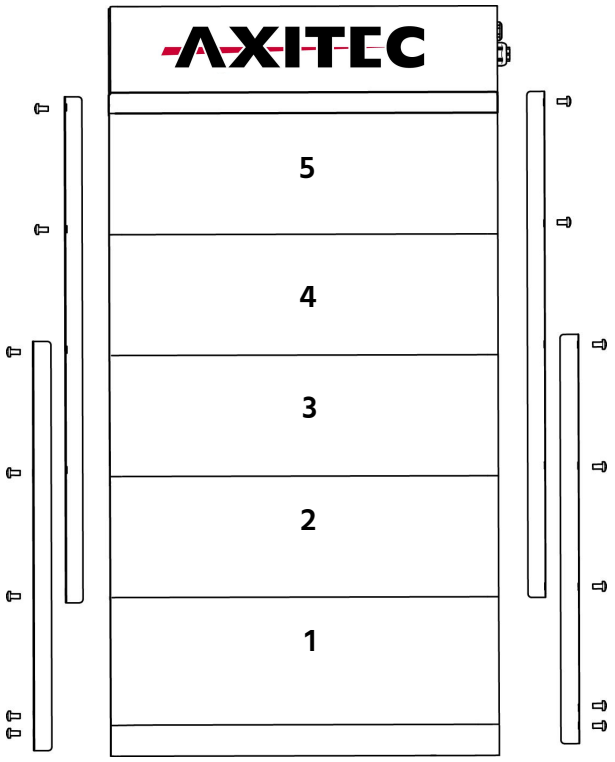
AXITEC
5
4
3
2
1

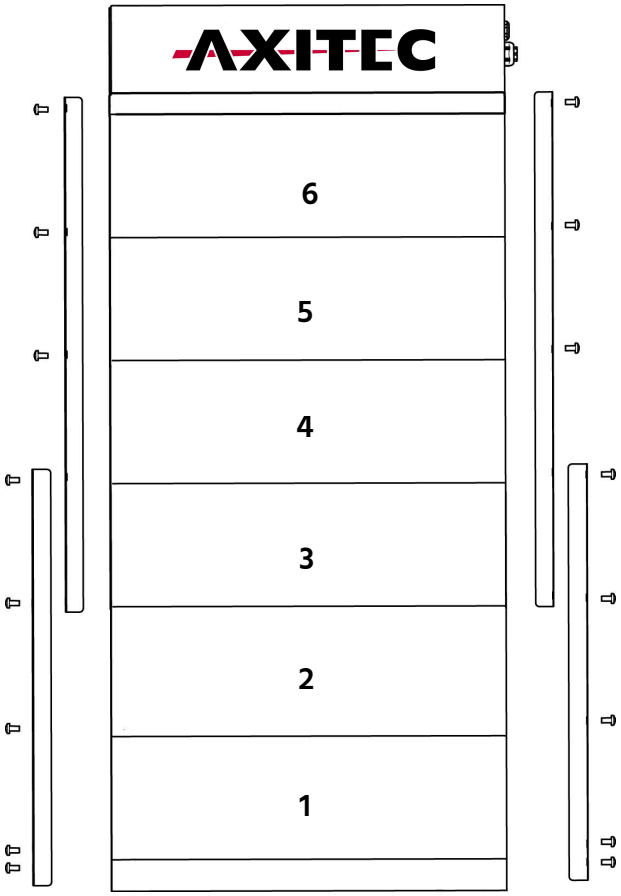
AXITEC
6
5
4
3
2
1

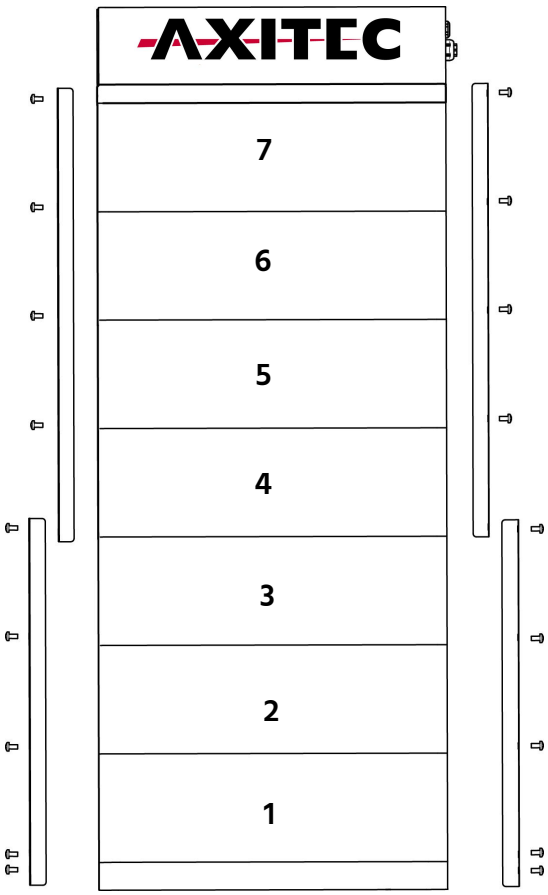
AXITEC
7
6
5
4
3
2
1

3.4.9 INSTALLATION OF THE ANTI-TOPPLING BRACKETS FOR THE SYSTEM

L i SV3 system is equipped with two anti-toppling brackets as follows.

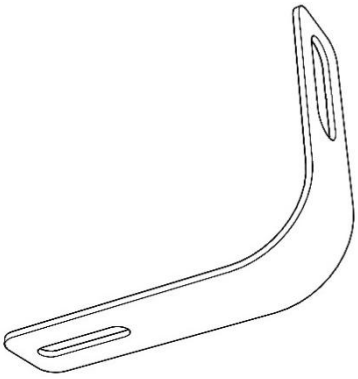

Such brackets act as an alternative of ground mounting of the battery system. Customers can choose either of the following methods for the system installation:

- ground mounting with 4 x M8 expansion bolt to the support surface (see *section 3.4.5*).
- bracket mounting with 2 x M8 expansion bolt to the wall (Battery system still needs to be placed on the support surface for supporting the overall weight.)

As long as the installation area meets the requirement of the installation site (see *section 3.4.3*), in either case the installation stability is guaranteed.

The detailed installation process with such brackets are as follows:

1. Put the base along the wall and reserve 40 mm distance between back of the base and the wall.

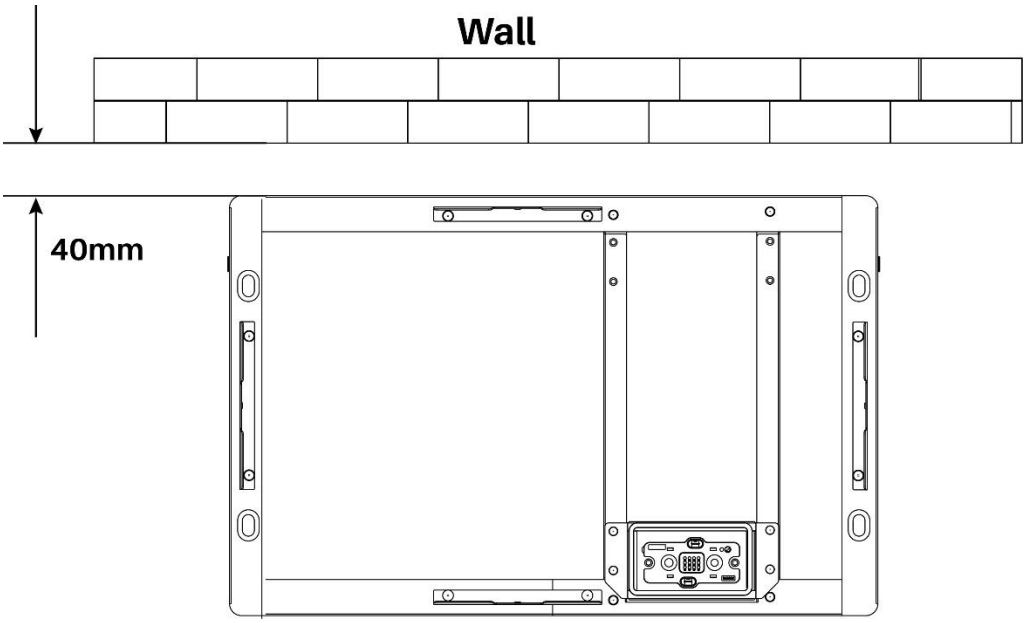

2. Follow the steps described above correctly to install all the battery modules, BMS and brackets.

IMPORTANT: When installing the metal brackets at the back side**, ALWAYS** remain the **two connecting points** between brackets and BMS **unscrewed** shown as below.

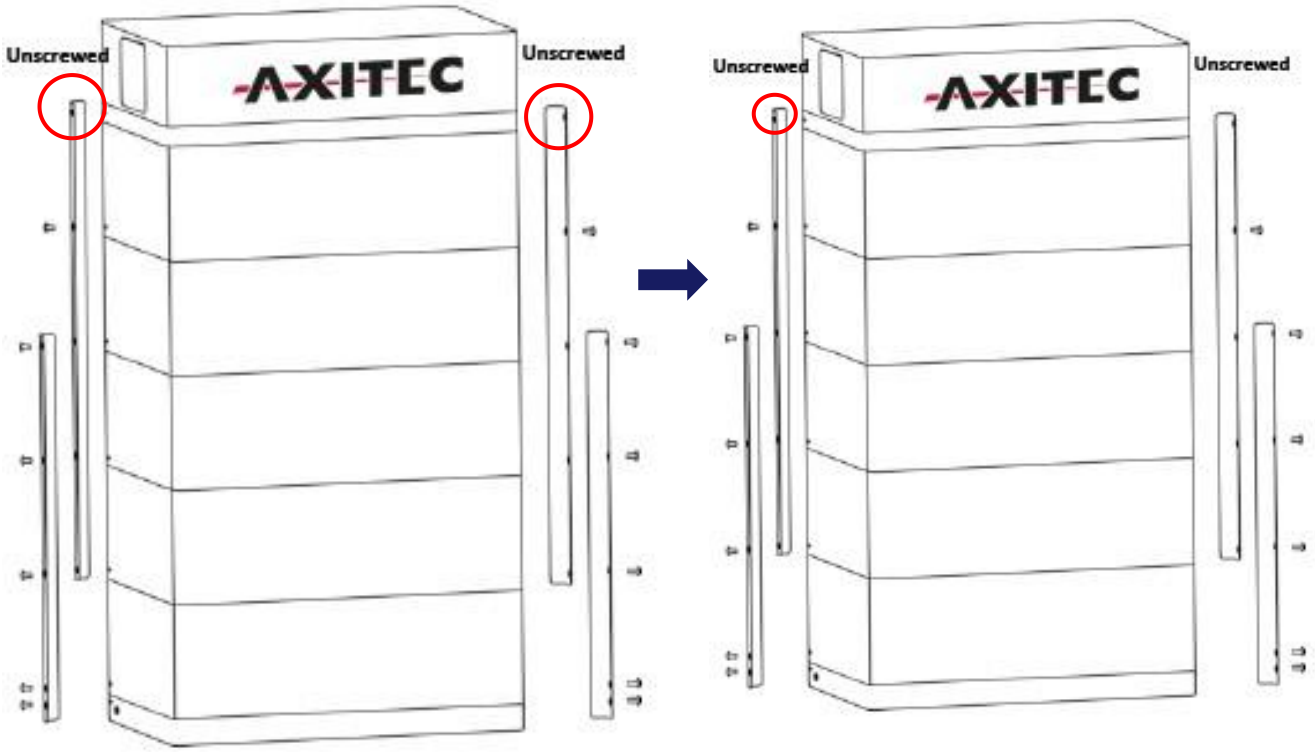

3. Follow the illustrations below, firstly fit the anti-toppling brackets on back sides of the BMS, then use M4 screws to fix.

REMEMBER to fit the brackets on both sides of BMS, same with following steps：

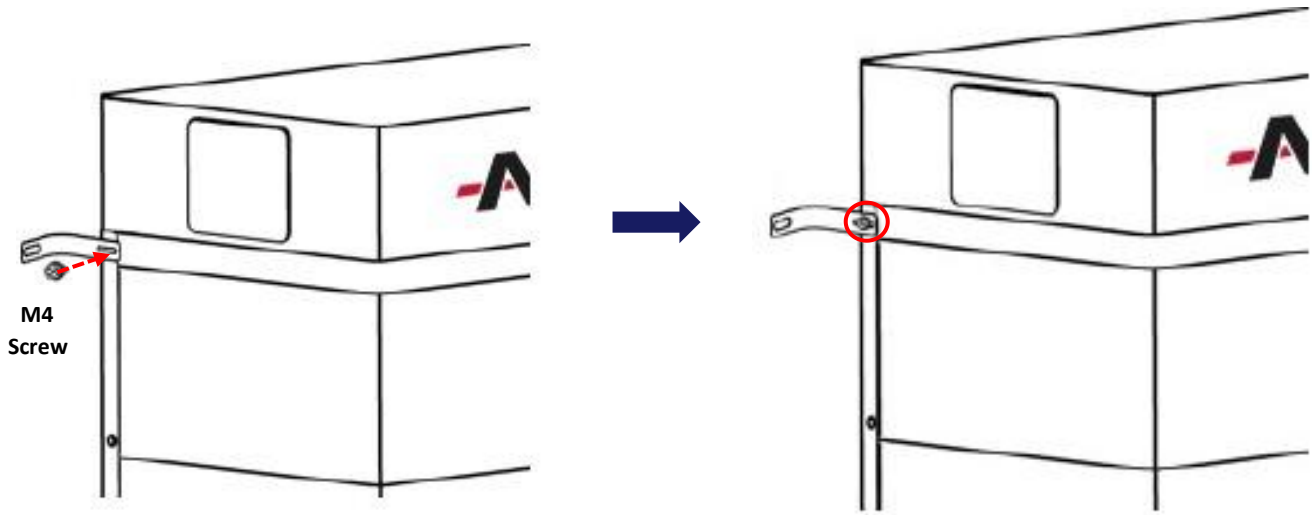

4. Mark the central points of the slotted holes at both sides on the wall.

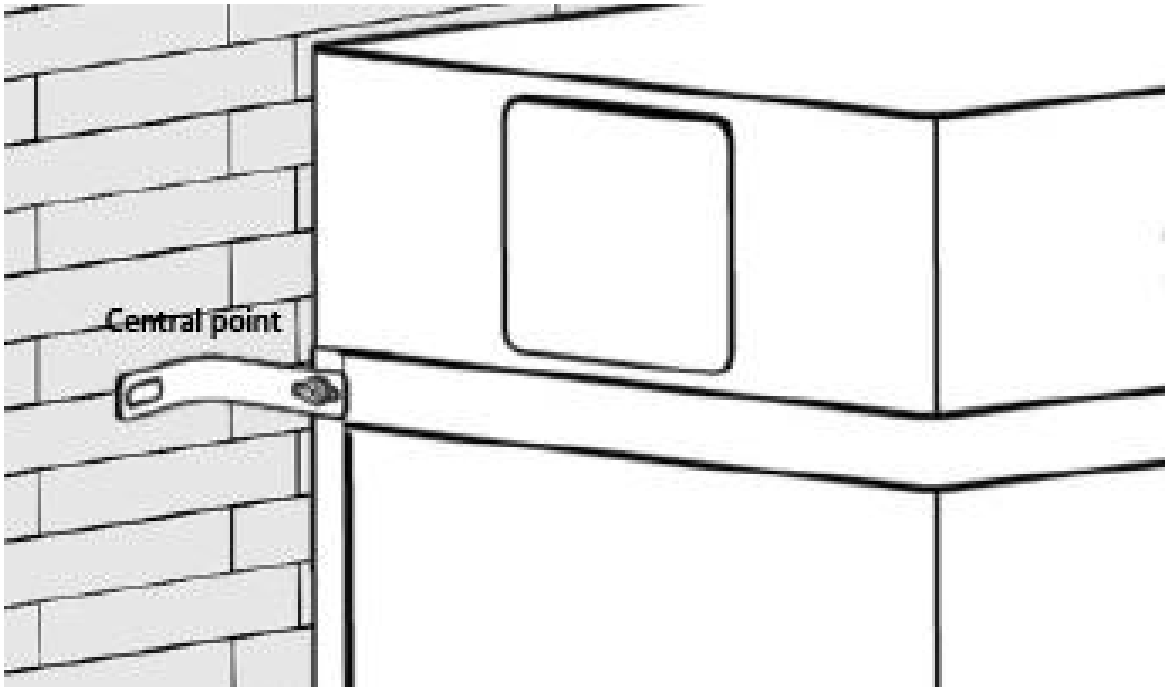

5. Dismantle the brackets on both sides. Aligning the central points, drill two holes (≥ 60 mm depth) in the wall with a drilling tool and clean the holes.

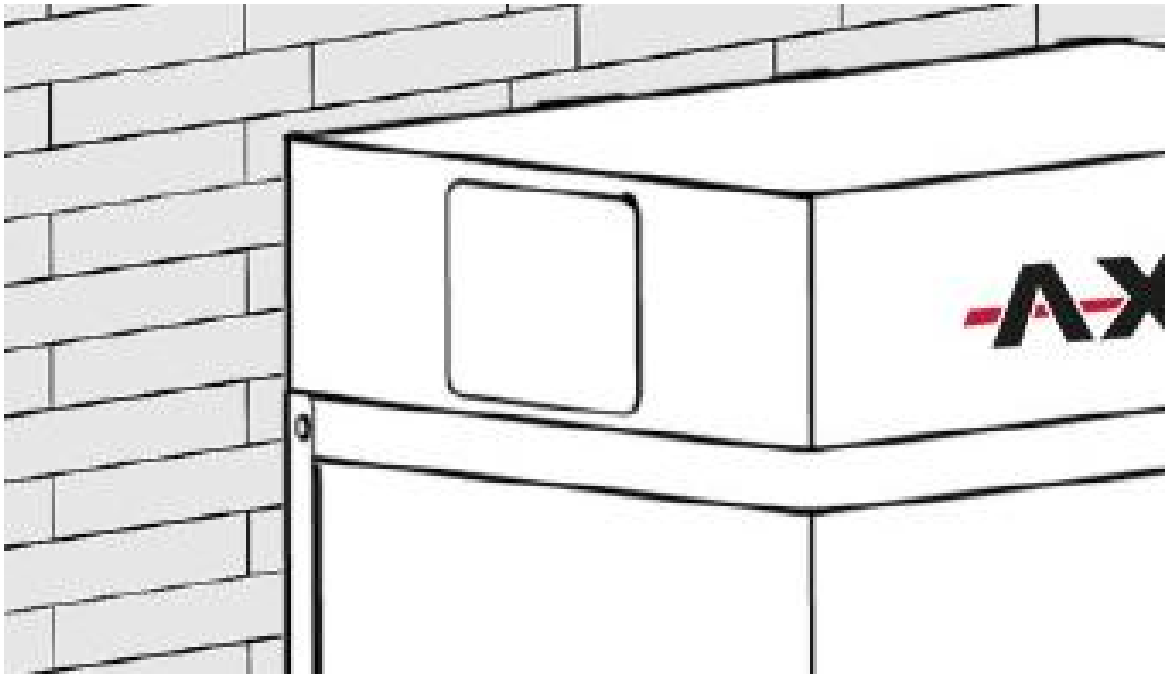

6. Embed the two M8 expansion bolts into the holes respectively.

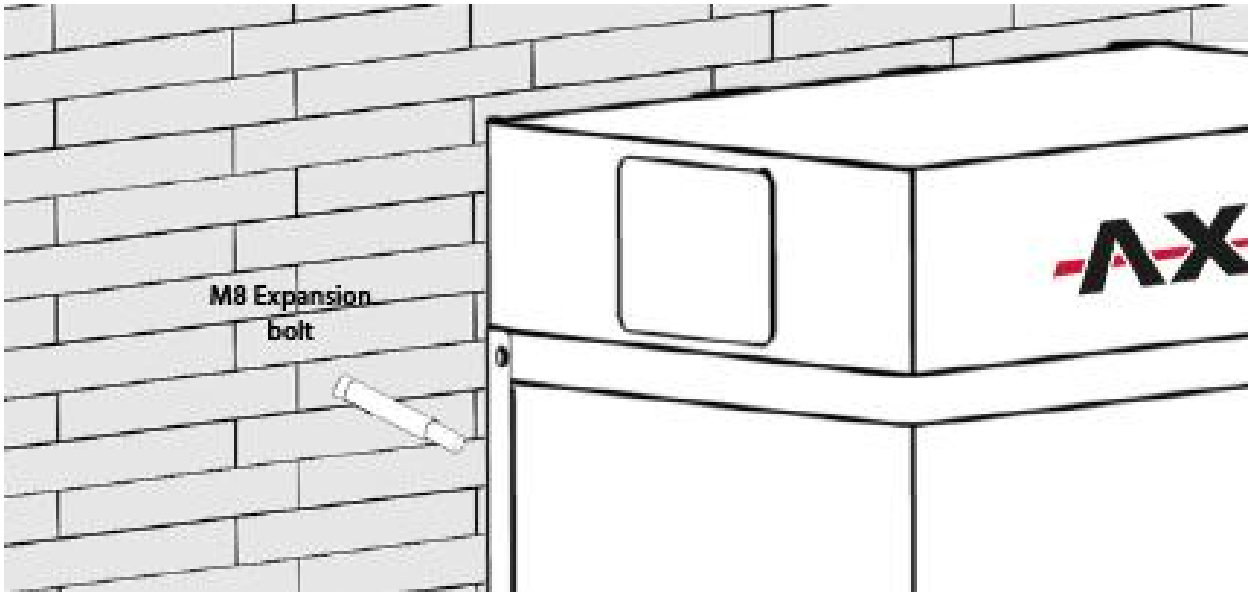

7. Fit the brackets across the M8 expansion bolts on both sides, then fix the brackets on the BMS with M4 screws.

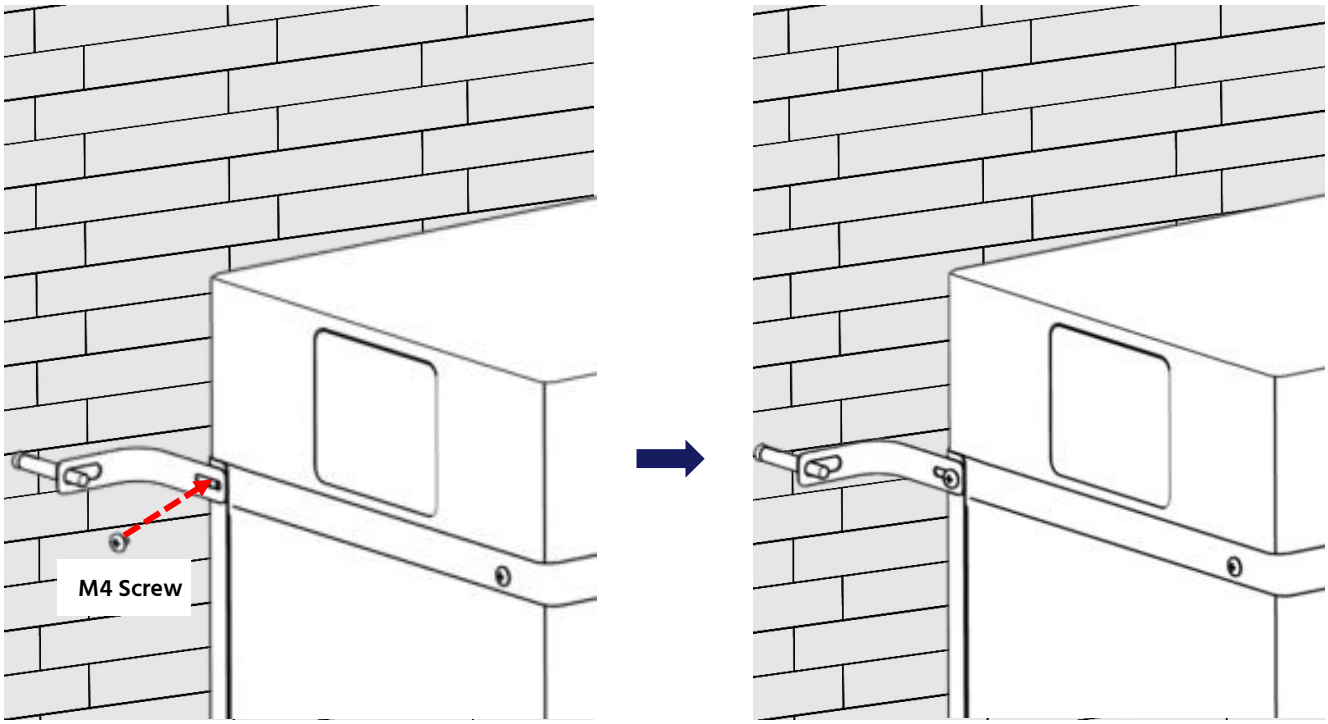

8. Fix the M8 nut (a) across the 8 mm flat gasket (c) and spring washer (b), with 12~13 N.m torque. Repeat this step for the other
bracket.

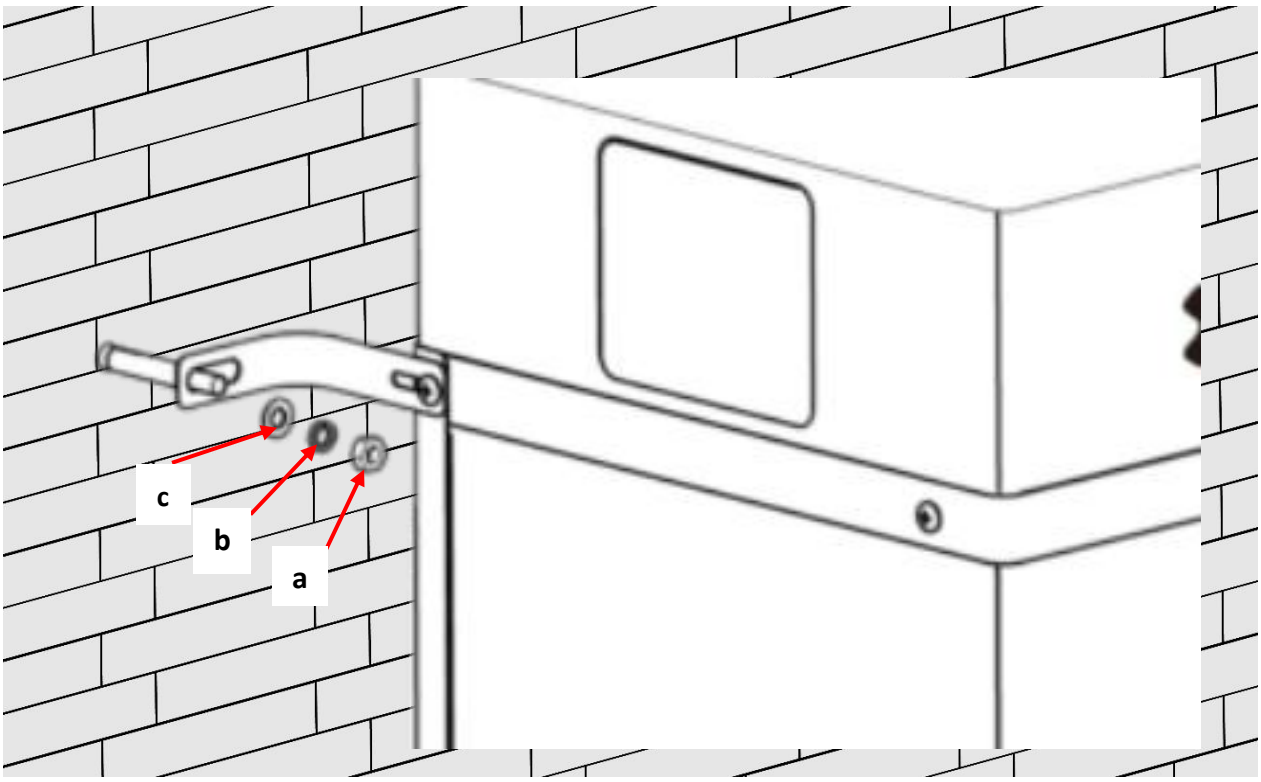

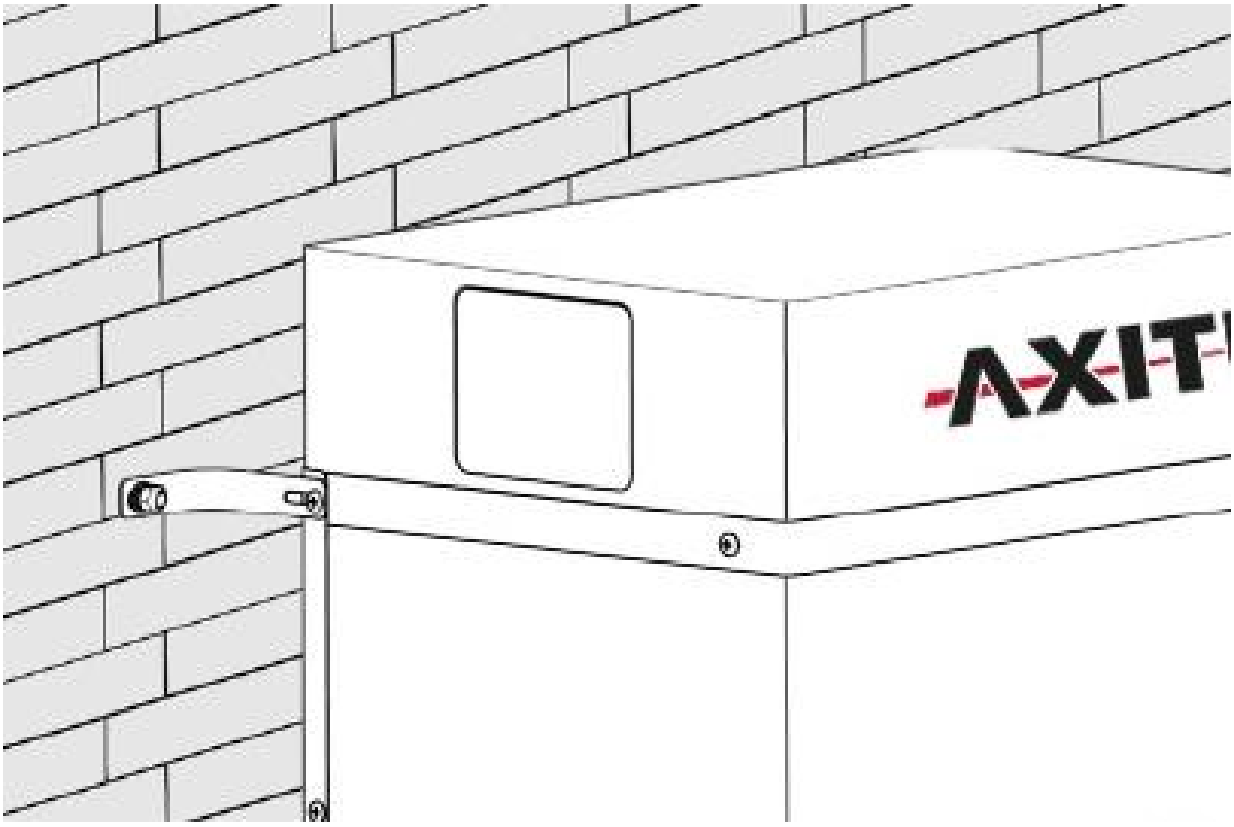

3.5 Cables Connection

Danger: The battery system is high voltage DC system. Make sure the grounding is fixed and reliable.

Danger: No short circuit or reverse connection of the battery system's positive and negative ports.

Caution: Wrong communication cables connection will cause the battery system failure.

3.5.1 Grounding

Warning: The Li SV 3 modules has 3 grounding points a follows.

Grounding cable must be≥ 10 AWG. The cable shall be copper with yellow-green color.

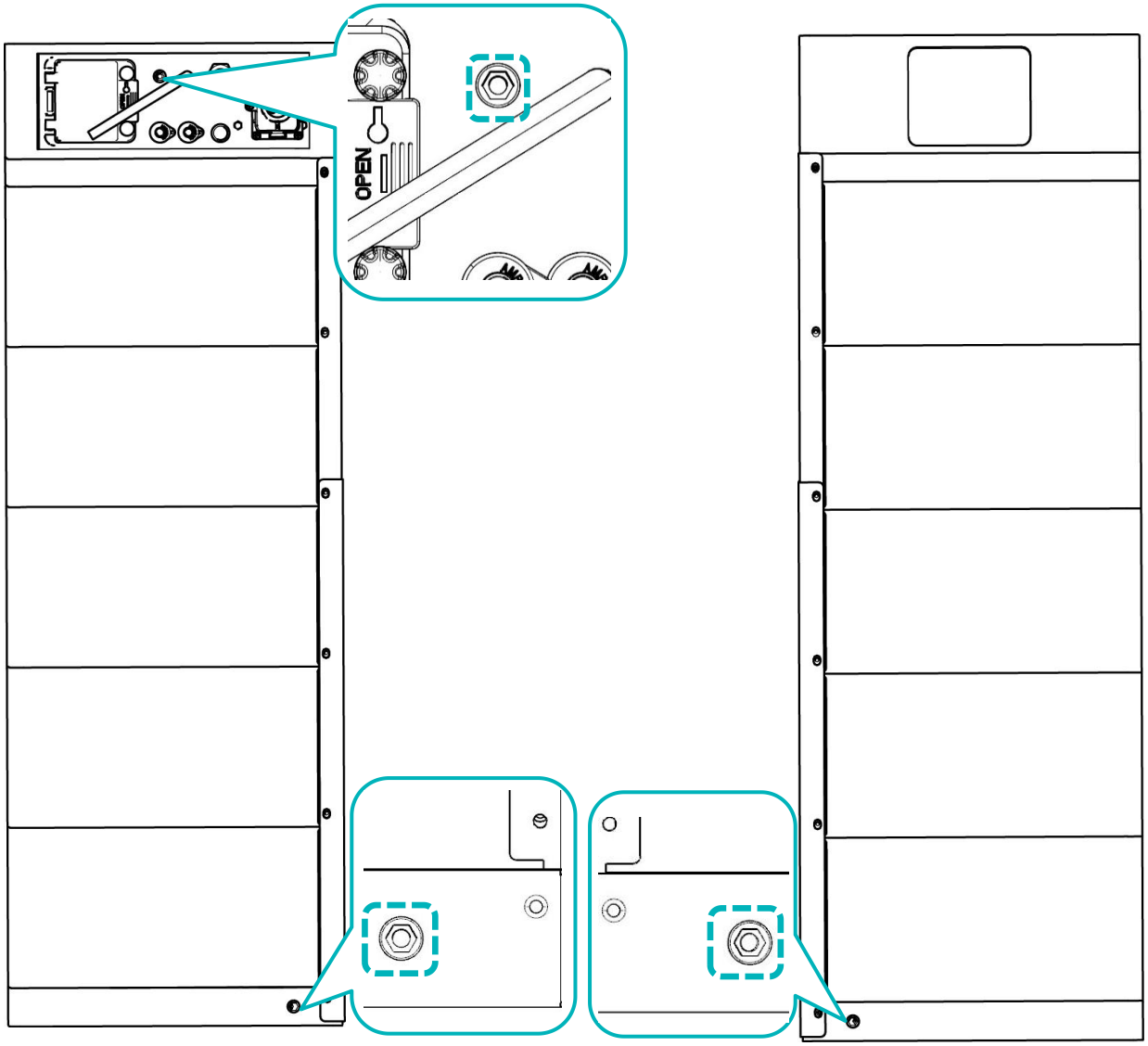

3.5.2 Cables

Caution: Power cables use water-proofed connectors. To disconnect, it is required to use a special tool (in the accessory bag), shown as the picture. Do not pull out the cables directly.

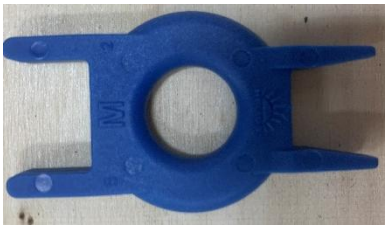

NOTE: Communication cable uses RJ45 connector and water-proof cover(M19-RJ45) matches with controller connection port.

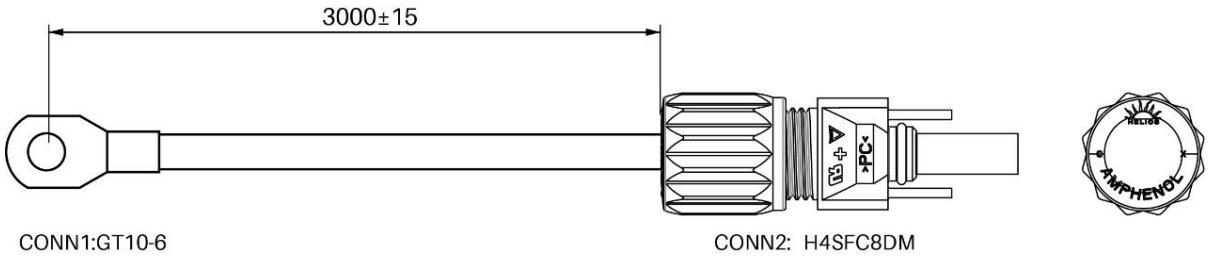

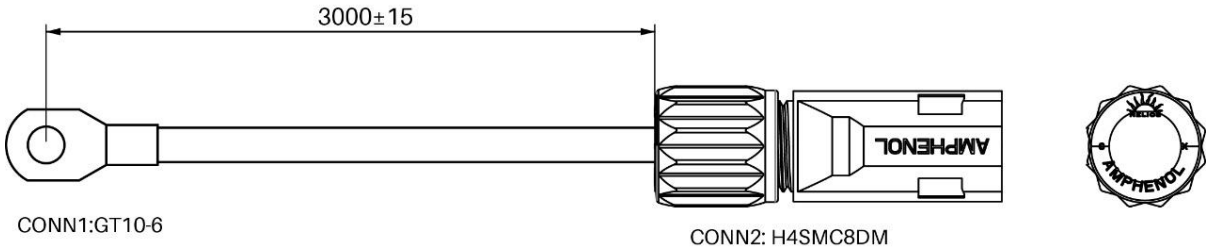

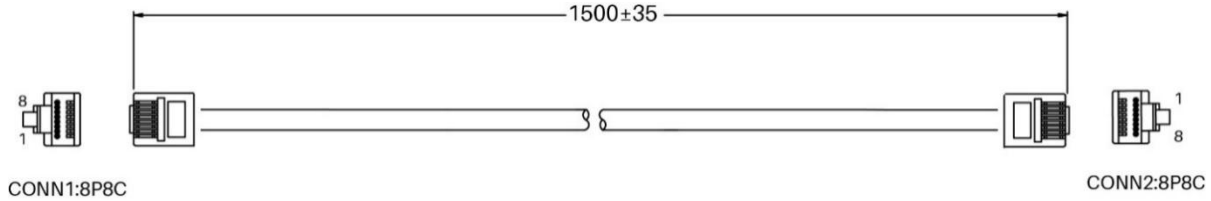

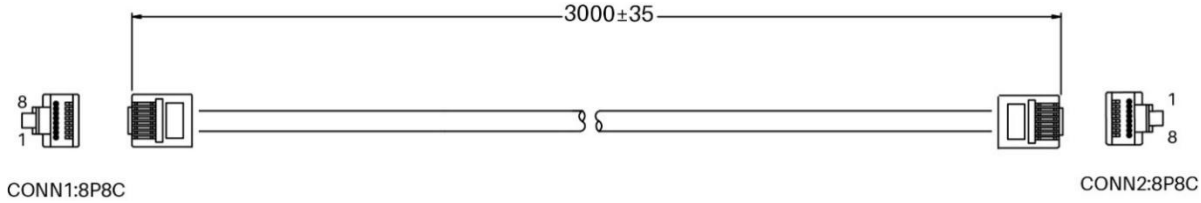

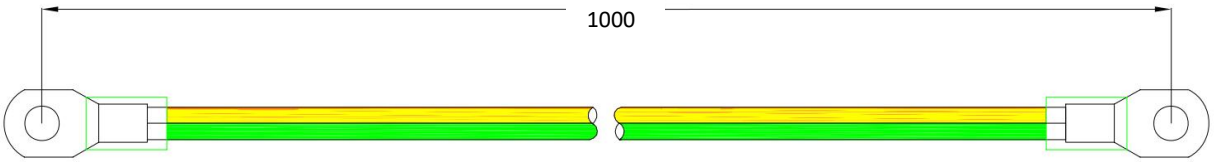

3.5.3 Multi-Strings' Battery Wiring Diagram

3.5.3.1 ELECTRICAL WIRING

A. Wiring diagram of 3 strings` system (String qty.≤3)

It`s suggested to use P-Combiner-HV-3-V2 for up to 3 strings, maximum 50Amps continuous operation.

IMPORTANT: DO NOT use P-Combiner-HV-3/V2 or similar concept of multi-strings connection method in case the multiple battery strings need to be operated independently.

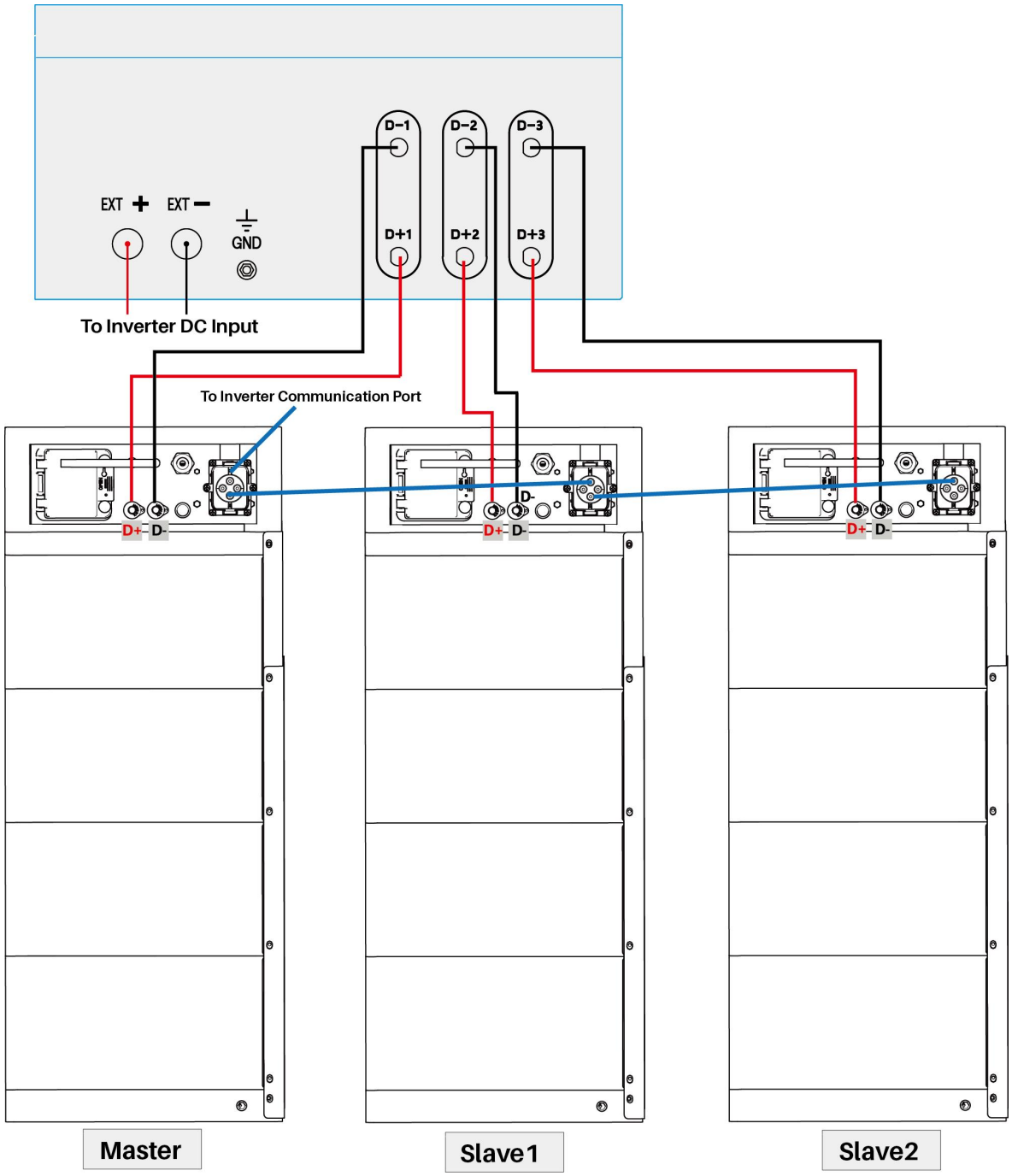

NOTE: Make sure to have the D+ & D- plugs into the combiner box properly.

B. Wiring diagram of multi strings' system (3<String quantity ≤ 6)

It`s suggested to use P-Combiner-HV-6-V2 for up to 6 strings, maximum100 Amps continuous operation.

IMPORTANT: DO NOT use P-Combiner-HV-6-V2 or similar concept of multi-strings connection method in case the multiple battery strings need to be operated independently.

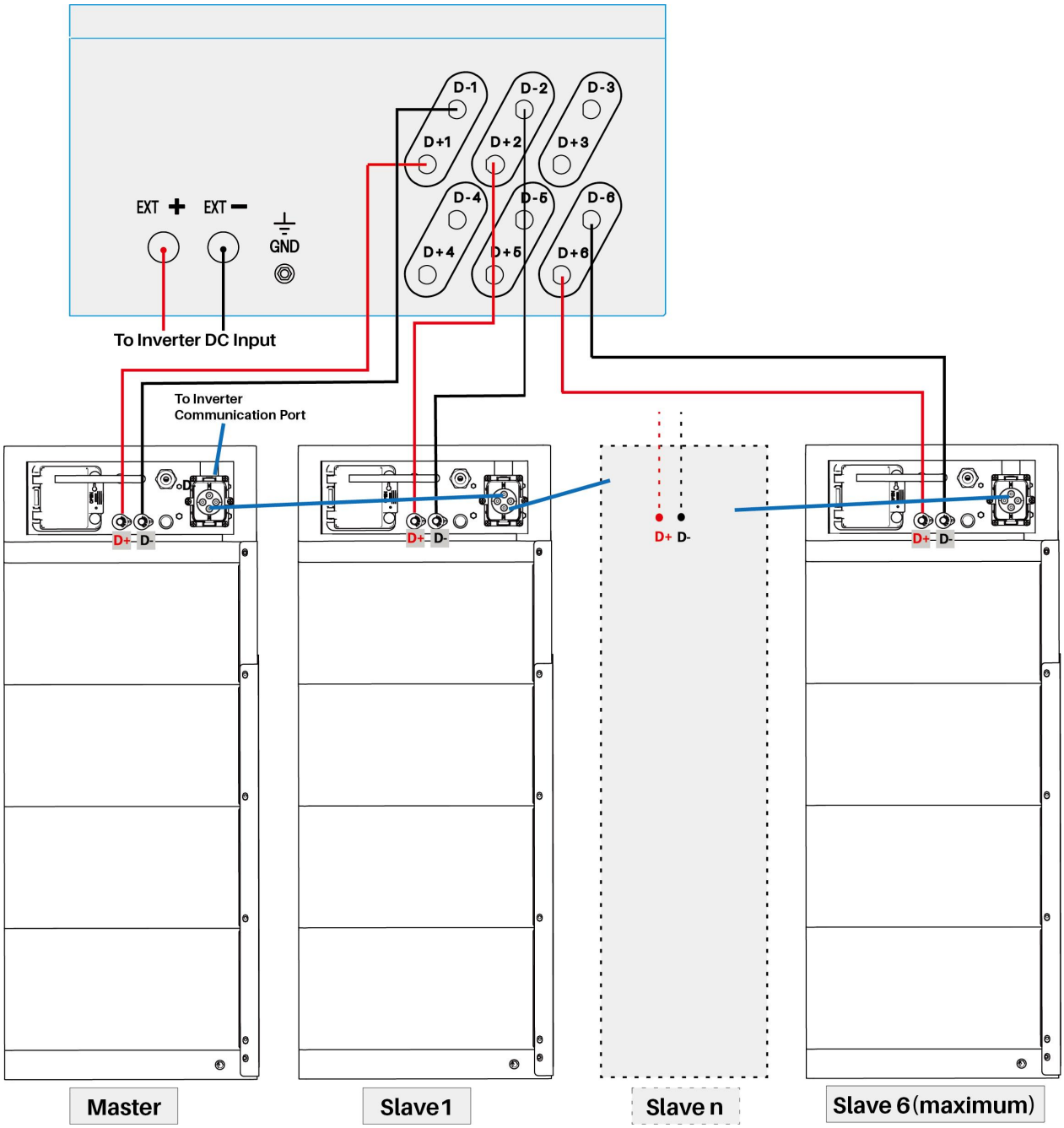

NOTE: Make sure to have the D+ & D- plugs into the combiner box properly.

3.5.3.2 Communication Cables Connection Of Master And Slave Battery Strings

The communication for master/slave string connection shall use an 8 pin pin-pin RJ45 cable, connecting from the first BMS Link 1 to the second BMS Link 0, then from the second BMS Link 1 to third BMS link 0(if has), all the way to the last BMS Link 0. The BMS with Link Port 0 EMPTY is defined as the Master string. Select either CAN or RS485 on the master string for further connection with the inverter or upper controller.

The slave strings` CAN/RS485 Port is ineffective in this case.

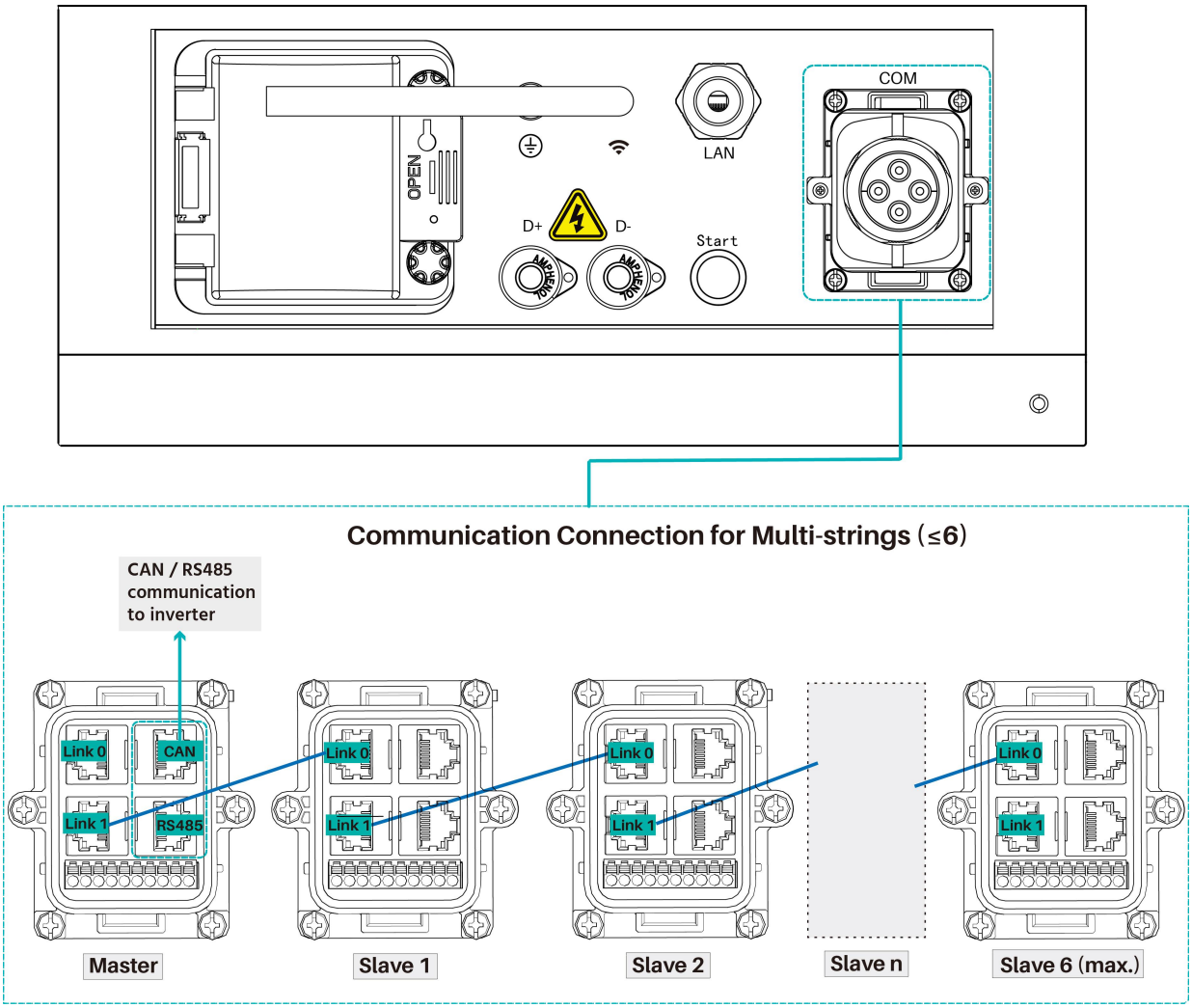

4. OPERATION

4.1 System Power On

4.1.1 SINGLE STRING SYSTEM POWER ON

Warning: Double check all the power cables and communication cables. Make sure the voltage of the inverter/PCS matches the voltage of the battery system. Check to make sure all the power switches are OFF.

System Power On Procedure:

1) Check the grounding is connected.
2) Check all the cables are connected correctly.
3) If necessary, turn on the switch for battery on the inverter or the switch between inverter and battery system. If possible, turn on AC or PV power source to wake up the inverter.
4) Open the protection cover of Power Switch on the control module (BMS). And turn on Power Switch.
5) Press Start Button for at least 5 seconds or until buzzer rings. Battery takes 10-30 seconds for self-checking.

If the inverter is powered by AC or PV source, most types inverters can set up communication with BMS automatically, in this case, the BMS will close relay and system is ready for work.

If after 30 seconds' self-checking, the LED becomes as follows, this means the inverter needs to be powered on by the battery energy:

Status:	**Orange, solid**	**SOC:**	**Blue, Solid**

In this case, press the Start Button for at least 10 seconds, till the Status LED lighting Blue and fast flashing. Then the battery will perform black start to support the inverter. After the inverter is started and communication is set, the BMS is ready for work.

If the battery has been configured to a different communication protocol, please follow LED Long Press 2 guidance in *section 2.2.3.2*. Make sure to select the correct protocol and restart BMS to enable the communication with inverter.

Caution: If the power switch is tripped off due to over current or short circuit, be sure to wait **more than 30 minutes**, then it can be turned on again; otherwise it may cause damage to the switch.

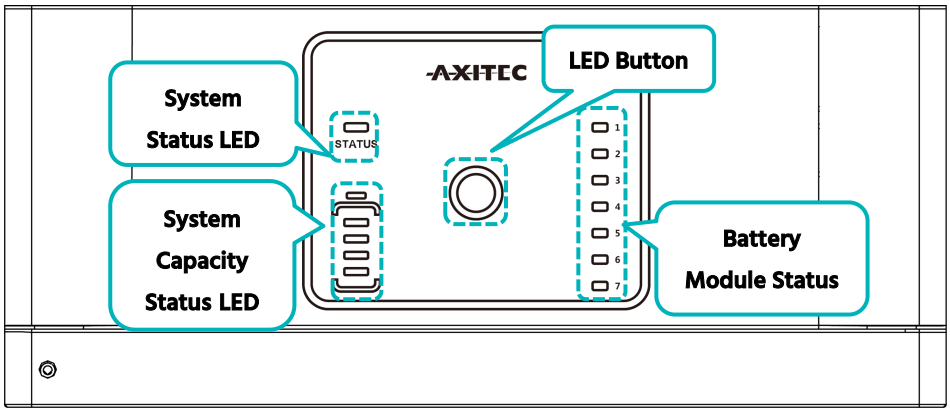

Warning: If there is any failure during the self-check process, be sure to debug the failure prior to next step. If the "STATUS" LED shows orange from the beginning, it means there is failure in the battery string. In this case, the Power Relays in BMS will open, and debugging must be done first.

NOTE: The LED light will be off in 20 seconds without any operation.

Caution: During the first time starting, the system requires full charge process for SOC calibration purpose.

Caution: After long time storage without charging, it is suggested to fully charge the whole Battery Energy Storage System (BESS) prior to installation. Depending on the SOC level, regularly every 6 months' full charge is requested during continuous operation as well. it will be handled automatically by the communication between BESS and external device.

4.1.2 MULTI-STRINGS SYSTEM POWER ON

Warning: Double check all the power cables and communication cables. Make sure the voltage of the inverter/PCS matches the voltage of the battery system. Check to make sure all the power switches are OFF.

System Power on Procedure:

1. Check grounding is connected.
2. Check all cables are connected correctly, especially the Link 1 / Link 0 between master and slave strings.
3. If necessary, turn on the switch for battery on the inverter or the switch between inverter and battery system. If possible, turn on AC or PV power source to wake up the inverter.
4. Open protect cover of Power switch. And turn on power switch on the control module (BMS)of all the strings.
5. From the last string, press start button for at least 5 seconds or until buzzer rings for start-up. Then further turn on each string one by one follow below table, the start-up interval between each strings shall less than 30 seconds:

Communication Structure	Start-up Sequence
Master string	Last Start-up
Slave string 1	5th Start-up
Slave string 2	4th Start-up (if has)
Slave string 3	3rd Start-up (if has)
Slave string 4	2nd Start-up (if has)
Slave string 5	1st Start-up (if has)

6. After all strings start-up, the battery system takes 30 seconds for self-checking.

   If the inverter is powered by AC or PV source, most types inverters can set up communication with BMS automatically. In this case, the BMS will close relay and system is ready for work.

   If after 30 seconds' self-checking the LED becomes as follows, this means the inverter needs to be powered on by the battery energy:

Status: Orange , solid	SOC: Blue, Solid

In this case, press and hold the Start button for at least 20 seconds, till the Status LED lighting Blue and fast flashing. Then battery will perform black start to support inverter. After the inverter is started and communication is established, the BMS is ready for work.

4.2 System Power Off

Danger: When any failure occurs or there is a need for service, the battery storage system must be powered off at first.

System Power Off Procedure:

1. Turn off inverter or power supply on DC side.
2. Turn off the switch between PCS and battery system.
3. Turn off the power switch of the all BMSs.

Caution: Before replace the battery module for service, make sure to charge/discharge the existing battery module voltage similar to the replaced one. Otherwise the system needs long time to do balance for this replaced battery module.

Caution: When restart is required for any troubleshooting steps, make sure to restart the entire system (every BMS within the system). Please do not only restart partially of the BMS within the system, which will further lead to error.

5. SYSTEM DEBUG

This system debug is for BESS (Battery Energy Storage System). BESS debug can't be performed alone. It must be operated with configured inverter, UPS, PCS and EMS system together.

Debug Step	Instructions
Preparations for debug.	Turn on the BESS, referring to *Section 4*. DO NOT turn on the load before turning on the whole BESS. Remark: Except the BESS, if other equipment has its own system power on procedure, be sure to follow its specific operation manual.
Working together with inverter	(1) Check the communication cable connection and make sure the cable order on battery and inverter side are matched. All undefined pins are suggested to be empty. (2) Check the baud rate of inverter. The default value of battery CAN is 500kbps, MODBUS 485 is 9600bps. If necessary, change the baud rate of RS485. (3) Check that the terminal resistance CAN 120 Ω, RS485 120 Ω. (4) If necessary, check the settings on inverter or control box has right parameters and brand of battery. And check the information of BESS shown on inverter is correct.

6. MAINTENANCE

6.1 Trouble Shooting

Danger: The Li SV 3 is a high voltage DC system, operated by qualified and authorized personnel only.

Danger: Before checking the failure, be sure to check all the cables connection and check if the BESS can be turned on normally.

Check the environment first.

No	Problem	Possible Reason	Solution
1	No power output, no LED on.	Too short time for pressing Start button.	Press and hold at least 5 seconds to turn on. Press and hold at least 20 seconds for black start.
		The button battery in controller is missing or has failure. The power supply in control module (BMS) has failure.	Change the control module.
		The battery voltage is too low.	Make sure there are at least 2 battery modules.
		The connector of base has failure or the base is not connected.	Make sure the base in connected properly and change base if necessary.
2	After turning on, Status LED slow flashing orange. Others off.	Self-checking failure. DC side has a voltage, but voltage difference with the battery system is higher than 20V.	Make sure no DC voltage or set correct DC voltage before pressing Start button. Follow power on process to turn on.
		BMS internal failure.	Use debug tool/Wi-Fi monitoring to further analysis or change the control module.

3	Status LED fast flashing orange, others off.	The time interval after latest black start is too short.	Wait more than 5 minutes and try black start again.
		The battery system under error condition such as: temperature or current protection or other errors, thus no response to black start.	Make sure no other protection factors. Or use debug tool for further analysis.
4	Buzzer ring continues	Relay adhesion or failure.	Completely disconnect battery system with any DC source then make a restart. If problem still exists, then replace the controller.
5	Status LED solid orange. Battery module LED blue solid.	Communication lost with inverter	Check the communication cable PIN and wiring is correct. Check the inverter communication settings
		Over current protection.	Check DC side. And wait until BMS release protection.
		Control module failure.	Use debug tool for further analysis or change the control module.
6	Status LED solid orange. Battery module exists LED in orange solid	Over/ under temperature protection.	Check environment temperature. And wait BMS release.
		Over voltage protection.	Check DC charge voltage setting or wait BMS release.
		Under voltage protection.	Perform black start function, and then charge the system.
		Battery module BMS failure	Use debug tool for further analysis or change the battery module.
7	All LED blue but no output.	Fuse fusing	Change the control module
8	Other failure	Cell failure or electrical board failure. Or debug tool is needed for further analysis.	If you still can't debug the failure, please contact with distributor or AXITEC.

Once a certain failure is detected following the trouble shooting procedure, turn off the battery string first before replacement so as to avoid further over discharge to the system due to the self-consumption.

6.2 Replacement Of Main Components

Danger: The Li SV 3 is a high voltage DC system, operated by qualified and authorized personnel only.

Danger: Before replacing the main components, **turn off** the maintenance battery string's power first. Make sure the D+ and D- terminals are without power. Refer to *section 4.2* for turning off process.

6.2.1 REPLACEMENT OF BATTERY MODULE

1. Charge existing module to full (SOC 100%). Make sure new battery module is 100% SOC as well.
2. Turn off the whole battery string's power. Make sure to confirm the **D+** and **D-** terminals are without power. Refer to *section 4.2* for turning off process.
3. Dismantle **D+** and **D-** power cables, communication cable and grounding cable.
4. Dismantle the control module's fix screws on the interface panel and the display panel.
5. Dismantle the fix metal brackets as follows

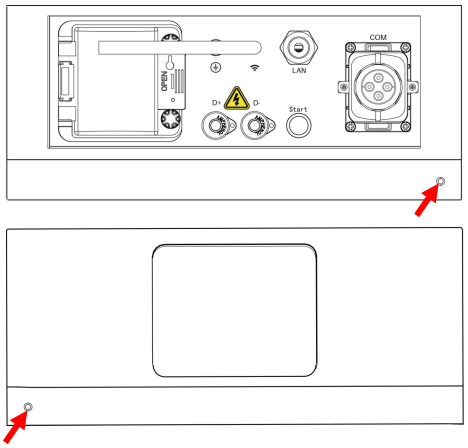

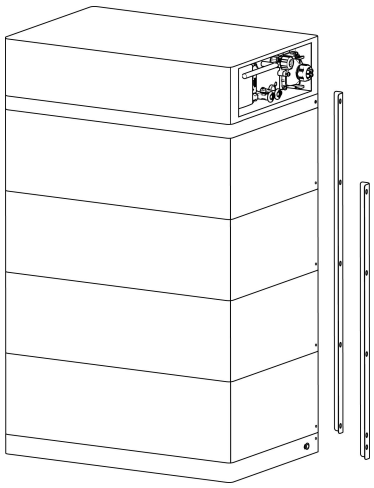

6. Remove the control module and each battery module one by one

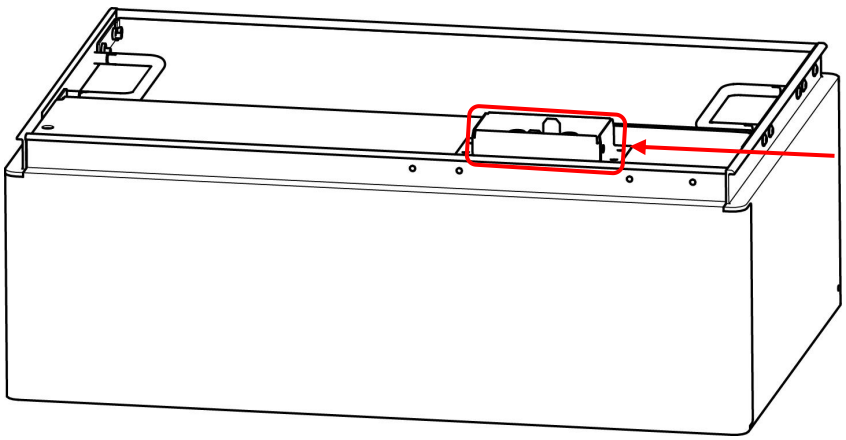

Danger: When battery is connected together with the base the internal socket still has high voltage DC power from serial connected battery modules.

Warning: Single battery module is 39 kg. If there are no handling tools, at least more than 2 people are needed to handle with it.

7. Pile up the new battery module. And install back the battery modules and control module.
8. Fix back the two screws on the control Module's. And Install back the fix metal brackets.
9. Install back Grounding cable, Communication cable and the D+ and D- Power Cables.
10. Turn on this battery string, referring to *section 4.1.*

6.2.2 REPLACEMENT OF CONTROL MODULE (BMS)

1. Turn off the whole battery string's power. Make sure to confirm the D+ and D- terminals are without power. Refer to *section 4.2* for Power Off process.
2. Dismantle D+ and D- power cables, communication cable and grounding cable.
3. Dismantle the control Module's fix screws on the left and right (same as *section 5.2.1*).
4. Dismantle the fix metal brackets (same as *section 5.2.1*).
5. Remove the control module.

Danger: When battery is connected together with the base the internal socket still has high voltage DC power from serial connected battery modules. Beware of electric shock.

6. Pile up the new control module.
7. Fix back the two screws on the control Module's. And Install back the fix metal brackets.
8. Install back grounding cable, communication cable and the D+ and D- power Cables.
9. Turn on this battery string. Refer to *section 4.1* for Power On process.

6.3 Battery Maintenance

Danger: Battery maintenance can ONLY be done by qualified and authorized personnel.

Danger: Some maintenance items must be turned off at first.

6.3.1 VOLTAGE CHECK

[Periodical Maintenance] Check the voltage of battery system through the monitor system. Check if the system voltage is abnormal. For example: Single cell's voltage is abnormally high or low.

6.3.2 SOC CHECK

[Periodical Maintenance] Check the SOC of the battery system through the monitor system. Check if the battery string SOC is abnormal.

6.3.3 CABLES INSPECTION

[Periodical Maintenance] Visually inspect all the cables of the battery system. Check if the cables are broken, aging or loose.

6.3.4 BALANCING

[Periodical Maintenance] The battery strings will become unbalanced if not being fully charged for a long time. Proposal: every 3 months do the balancing maintenance (charge to full), normally it will be done automatically through communication between system and external device.

6.3.5 OUTPUT RELAY INSPECTION

[Periodical Maintenance] Under low load condition (low current), switch the output relay to OFF and ON to hear the clicking sound, which means this relay can be turned off and on normally.

6.3.6 HISTORY INSPECTION

[Periodical Maintenance] Analyze the history records to check if there is an accident (alarm and protection) or not and analyze the reasons.

6.3.7 SHUTDOWN AND MAINTENANCE

[Periodical Maintenance]

Some battery function must be restarted before the EMS maintenance. ESS maintenance shall be done at least once every 6 months.

6.3.8 RECYCLE

NOTE

Damaged batteries may leak electrolyte or produce flammable gas.

In case a damaged battery needs recycling, follow the local recycling regulations (i.e. Regulation (EC) Nº 1013/2006 among European Union) to process, and use the best available techniques to achieve recycling efficiency.

7. REMARKS

7.1 Storage

For long-term storage, e.g. if it needs to be stored for a long time (more than 6 months), the battery modules are highly suggested to be stored in the temperature range of 5 ~ 45°C, relative humidity < 65% and corrosive-gas-freed environment. Before storage the battery should be charged to 50 ~ 55% SOC.

It is recommended to discharge and charge the battery every 6 months, charge to full and discharge to 50%. The longest discharge and charge interval shall not exceed 12 months.

Caution: If you don't follow the above instructions for long term storage, the battery cycle life will decrease heavily.

7.2 Capacity Expansion

A new battery module can be added onto the existing system at any time. Please make sure the existing system is being fully charged before adding a new module. In a serial connection system, the new module, even has a higher SOH, shall follow the system's worst SOH condition module to perform.

8. SHIPMENT

Before shipment, single battery module will be pre-charged to 100% SOC or according to customer requirements. After delivered on-site, the remaining battery capacity is determined by the storage time and condition.

- The battery modules meet the UN38.3 certificate standard.
- In particular, local rules and policies (e.g. ADR: European Agreement concerning the International Carriage of Dangerous Goods by Road) for the product transportation shall be complied with. For more details, please contact AXITEC: service@axitecsolar.com

Annex 1: Installation and System Power On Process List

Tick after completion	No.	Item	Remark
☐	1	The environment is meets all technical requirements. 3.3.1 Cleaning 3.3.2 Temperature 3.3.3 Fire-extinguisher System 3.3.4 Grounding System 3.3.5 Clearance	Refer to *section 3.3*
☐	2	Selection of installation sites.	Refer to *section 3.4.3*.
☐	3	Battery base is installed follow the technical requirements.	Refer to *section 3.4.5.*
☐	4	Battery modules installation.	Refer to *section 3.4.6.*
☐	5	Battery system are fixed.	Refer to *section 3.4.7.*
☐	6	Control Module (BMS) and Battery Module are installed well.	Refer to *section 3.4.7.*
☐	7	Connect D+ and D- between BMS to the inverter/PCS or confluence cabinet.	Refer to *section 3.5.3.1.*
☐	8	Connect the grounding cable.	Refer to *section 3.5.1.*
☐	9	Double check all the power cables, communication cables, grounding cable are installed well.	Refer to *section 3.5.1, 3.5.2 and 3.5.3.*
☐	10	Switch the external power or inverter/PCS on, ensure all the power equipment can work normally.	Refer to *section 4.1*.
☐	11	The first installation should do full charging progress automatically. If the status LED of BMS turns to blue, it means this battery string is in operation.	

Annex 2: System Power Off Process List

Tick after completion	No.	Item	Remark
☐	1	Soft-off the inverter through inverter's control panel.	Refer to *section 4.2*.
☐	2	Turn off the switch between inverter and this battery string (Li SV 3), or turn off the power switch of inverter, to make sure no current through this battery string.	Refer to *section 4.2*.
☐	3	Turn off the "Power Switch" of the BMS.	Refer to *section 4.2*.

AXITEC Energy GmbH & Co. KG

Otto-Lilienthal-Straße 5, 71034 Böblingen

Germany

T+49 7031-62885173

E service@axitecsolar.com

W www.axitecsolar.com