QUICK INSTALLATION GUIDE

CBS8000-64/80/96KWH

102040200619-1

Instructions

- All operations on this equipment must be carried out by trained and qualified electrical technicians or certified commissioning personnel. Operators must be fully familiar with the system structure, operating principles, and the relevant standards of the country/region where the project is located.
- Please read the user manual carefully before installing the equipment to understand the product information and safety precautions. Any damage caused by storage, transportation, installation, or operation that is not performed in accordance with this document and the user manual is not covered under the product warranty.
- Insulated tools must be used during installation. For personal safety, please wear personal protective equipment (PPE).
- During installation or operation, if personnel leave for a short period of time, the cabinet door must be closed.
- If the equipment is scratched or the paint is peeled due to impact during transportation or installation, please repair it using outdoor paint Y3-1172W (white) or RAL9011 (black).
- For the binding locations of the supplied installation parts, screws, and other accessories, please refer to the "Packing List".

01 INSTALLATION REQUIREMENT

To ensure sufficient airflow at the air inlet and facilitate maintenance, it is needed to reserve adequate space around the cabinet installation area. The minimum required space is shown in the figures below.

▸ 1 PCS Energy Storage Cabinet Installation Space

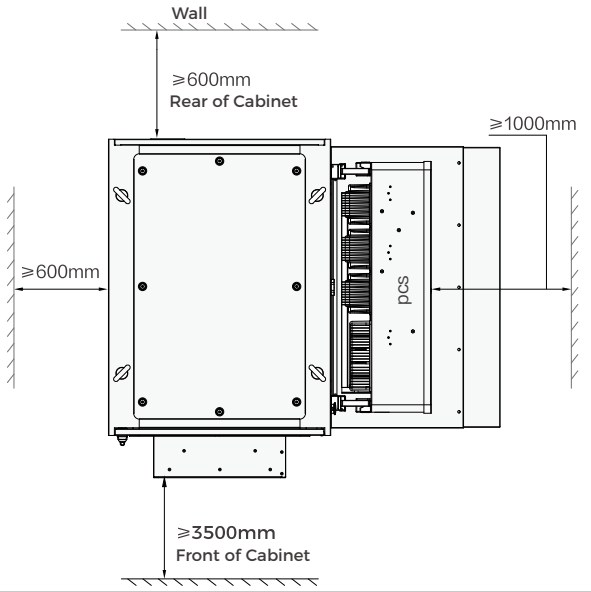

▸ 4 PCS Energy Storage Cabinets Installed Face-to-Face

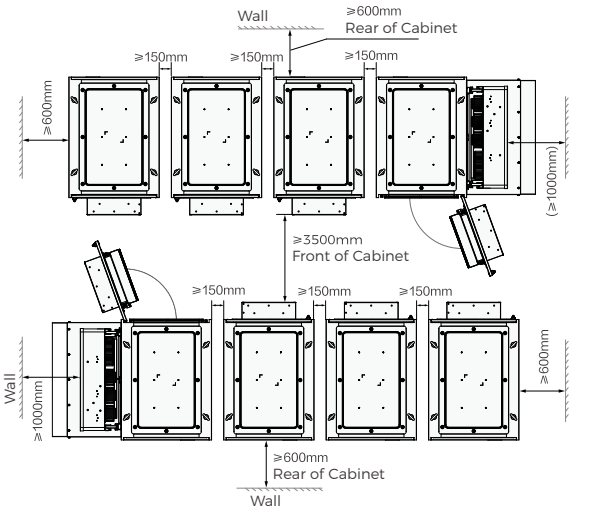

▸ 4 PCS Energy Storage Cabinets Installed Back-to-Back

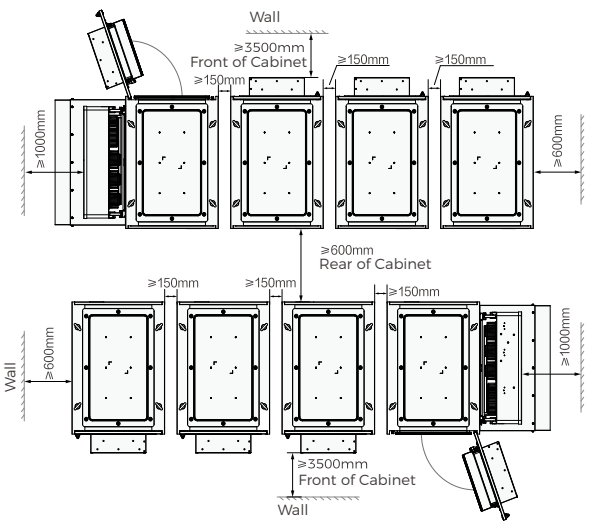

02 PRODUCT OVERVIEW

Instructions

The foundation requirements shall follow the description provided in the construction site design drawings. For detailed drawings, please contact the distributor or after-sales.

▸ Energy Storage Cabinet Diagram

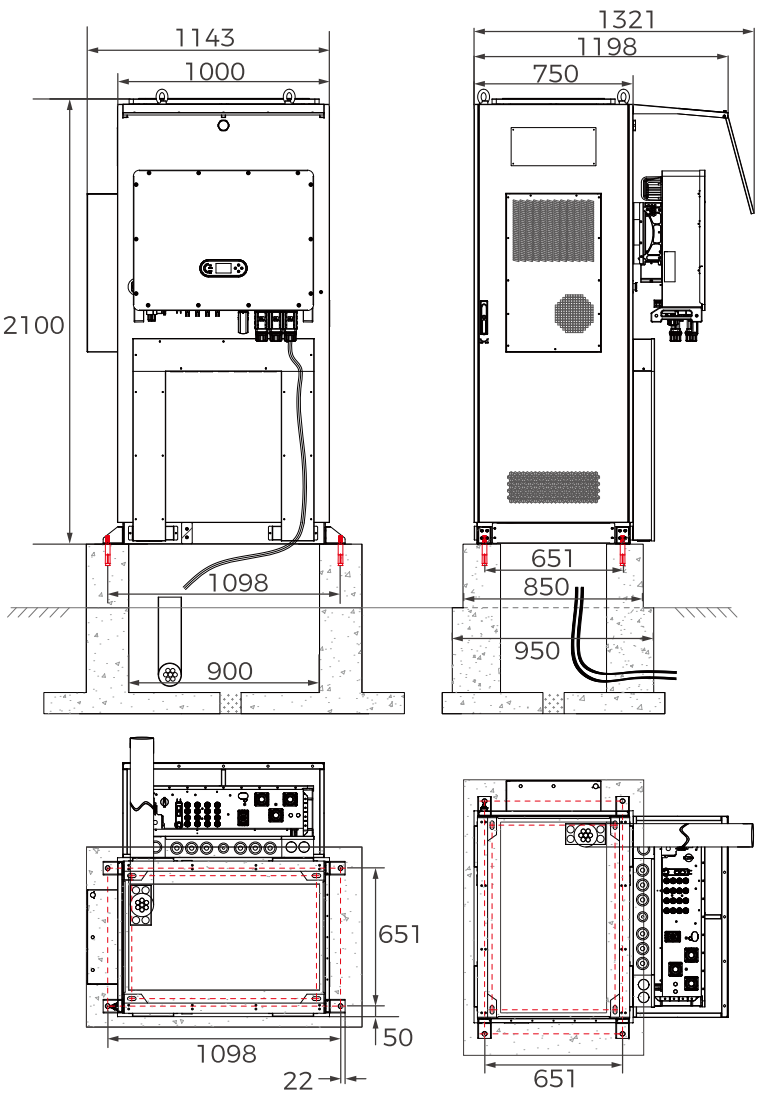

▸ Energy Storage Cabinets Parallel Connection Diagram

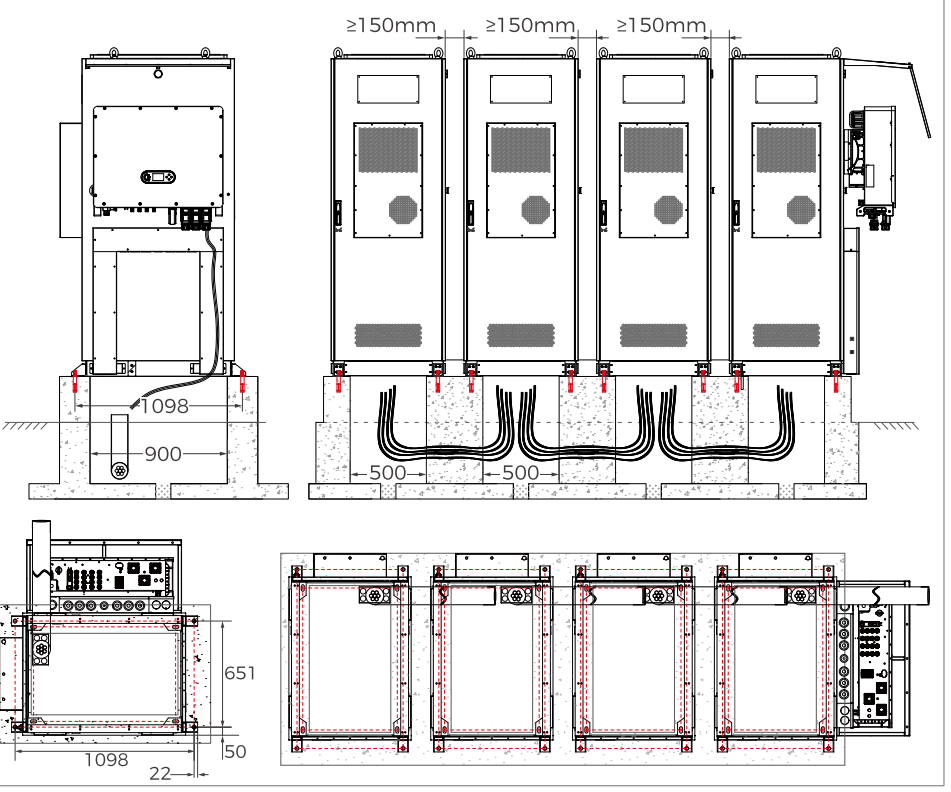

03 CHECK THE DELIVERY LIST

Standard Configuration

Energy Storage Cabinet + Accessory Kit for the Cabinet + Other Customized Requirements (as picture shown below)

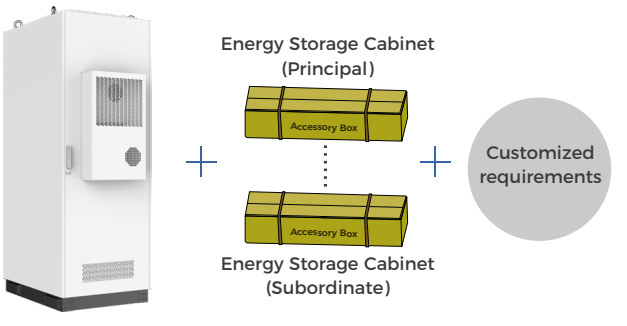

Instructions

Please check the delivered items and their quantities against the “Shipping List” and the “Packing List”. If any items are missing, please contact the distributor or after-sales.

Energy storage cabinet (A)

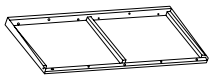 1Pcs	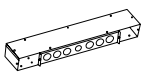 1PCS	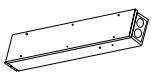 1PCS	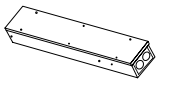 1PCS
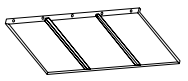 1PCS	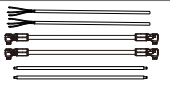 Harness pack A	 M20 4PCS	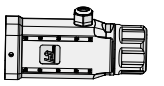 1PCS
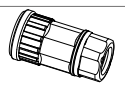 Waterproof connector 2PCS	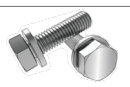 M10*30 9PCS	 M5*12 17PCS	 M4*12 26PCS	 M6*30 12PCS
 50 (KKT*50) 8PCS	 40 (KKT*40) 2PCS	 1PCS	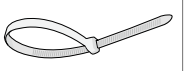 45PCS	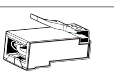 RJ45 end plug 2PCS

Energy storage cabinet (B/C)

 M20 4PCS	 1PCS	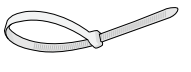 20PCS	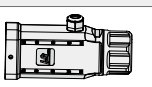 1PCS
 Harness pack B	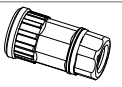 Waterproof connector 3PCS	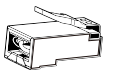 RJ45 end plug 2PCS	/

Note: Except for the wire length, all other materials in the B/C accessory kit are the same.

Energy storage cabinet (E)

 4PCS	 M8*25 18PCS	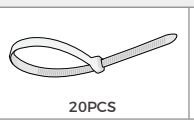 20PCS	 M16*150 5PCS	/

Energy storage cabinet (F)

 M20 4PCS	 1PCS	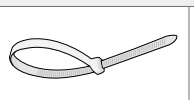 20PCS	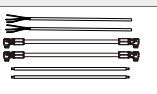 Harness pack F	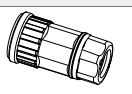 Waterproof connector 3PCS

Steel base

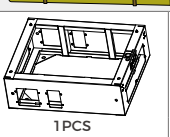 1PCS	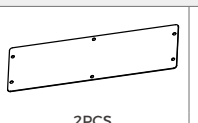 2PCS	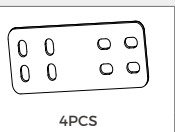 4PCS	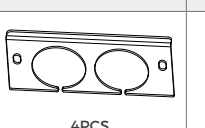 4PCS	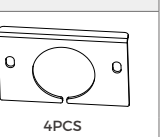 4PCS
 M16*150 5PCS	70 (KKT×70) 12PCS	M16*40 assembly 8PCS	M8*25 64PCS	1PCS
M16*40 assembly 8PCS	M16*40 assembly 16PCS	M16 assembly 16PCS	Expansion bolt assembly 4CPS	/

04 INSTALLATION

4.1 TOOLS

Hammer Drill (Drill Bits: Φ14 mm, Φ16 mm)	Socket Wrench	Torque Wrench	Diagonal Pliers	Wire Stripper
Flat-head Screwdriver (head: 0.6 mm*3.5 mm)	Rubber Hammer	Utility Knife	Marker	Steel Tape Measure
Digital or Bubble Level	Hydraulic Crimper	Cable Cutter	RJ45 Crimping Tool	Multimeter (DC Voltage Range ≥ 1500V DC.)
Heat Shrink Tubing	Heat Gun	Cable Ties	Insulated Ladder	Vacuum Cleaner
Crane	Lifting Rope	Forklift	/	

4.2 LIFTING AND FORKLIFT TRANSPORT

▸ Lifting

Use 4 PCS "M20*30 Lifting Rings", which can be obtained from the supplied accessory kit.

Instructions

- Before lifting, ensure that the concrete foundation meets the installation requirements, the foundation surface has proper positioning marks, and the energy storage system is correctly oriented to match the marks.
- The crane lifting capacity must be greater than 6T, with a working radius of no less than 5 m.

▸ Forklift Transport

Instructions

- Forklift load capacity must be greater than 4T. If the field working conditions do not meet the requirements, please contact a professional for assessment.
- Forklift can be positioned in any direction. Only the right and rear sides are illustrated here.

4.3 INSTALLING THE ENERGY STORAGE SYSTEM

▸ Corner Bracket Accessory Kit Installation

1. After placing the cabinet in the installation position, take out the accessories.
2. Use M8*25 screws to secure the corner brackets to the front and rear sides of the cabinet, with a total of four mounting points.
3. Secure the cabinet to the concrete floor using the expansion bolts.
4. Complete the installation and perform an inspection.

▶ Steel Base Installation (Optional: If this accessory is not purchased, please proceed with the standard installation.)

1. Lift or move the steel base to the designated position, ensuring that the “Black” side on the steel base faces the opposite direction of the intended door-opening orientation of the equipment.
2. Secure the steel base to the concrete floor using expansion bolts.
3. Fasten the energy storage cabinet firmly onto the steel base using bolts.
4. Install the cover plates and the parallel connection metal components.
5. Complete the installation and carry out an inspection.

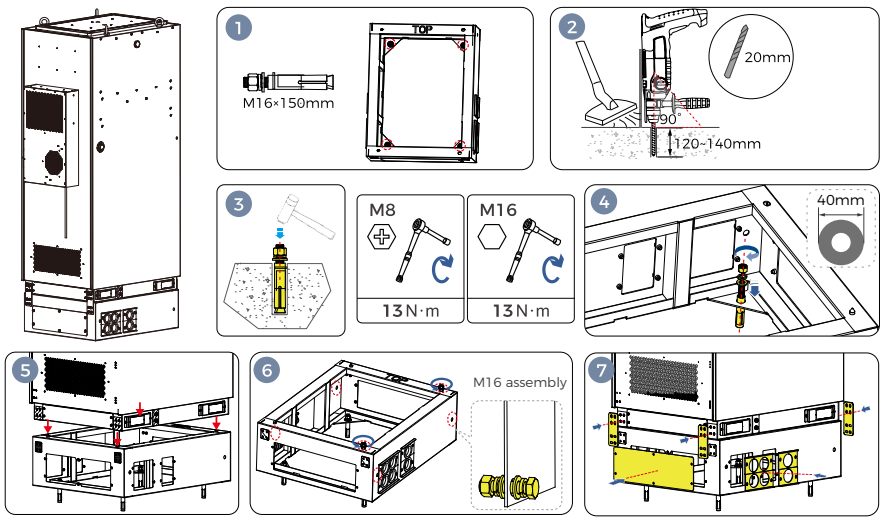

05 INSTALL THE ENERGY STORAGE SYSTEM SUNSHADE

Use 11 PCS "M6*30 screws" and 2 PCS "M5*12 screws" from the accessory kit. The sunshade is also included in it.

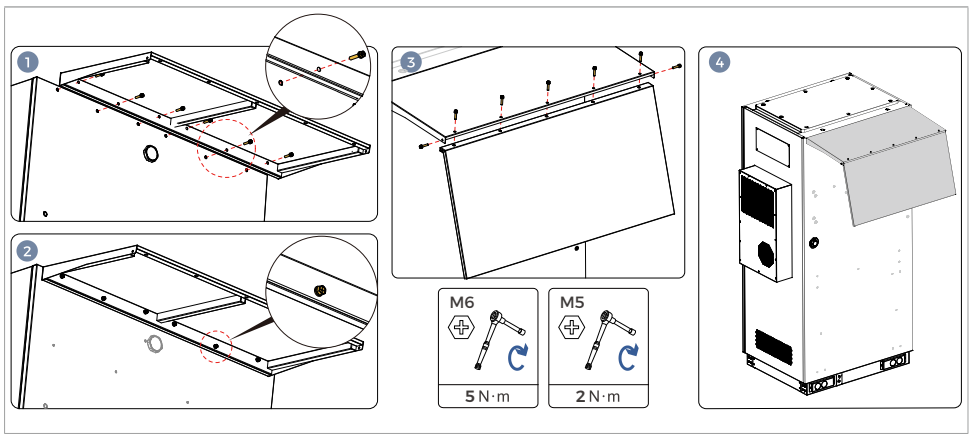

06 INSTALL THE PV INVERTER BRACKET

Use 4 PCS "M10*30 screws" from the accessory kit. The PV inverter bracket is included in the PV inverter package.

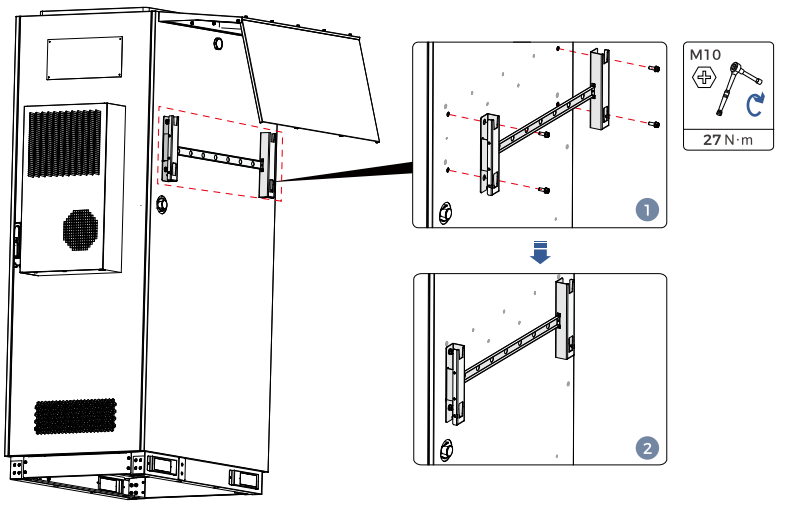

07 INSTALL THE ENERGY STORAGE SYSTEM CABLE TRAYS

Use 23 PCS "M4*12 screws", 13 PCS "M5*12 screws", 10 Grommet 50 (KKTX50), and 1 Grommet 40 (KKTX40) from the accessory kit. The cable trays are also included in the kit.

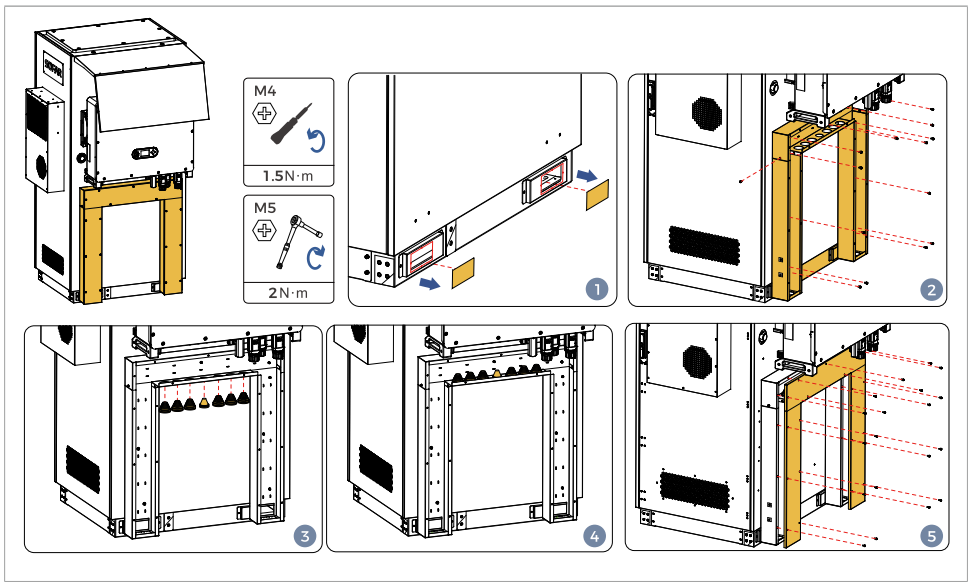

08 INSTALL THE ENERGY STORAGE SYSTEM GROUNDING PROTECTION WIRE

Use 4 PCS "M10*30" screws from the accessory kit. Ensure the grounding resistance is ≤ 4Ω.

▶ **Grounding Cable**
Use a 25mm² to 50mm² grounding cable to ensure a reliable connection between the energy storage cabinet and the grounding point of the site grounding grid.

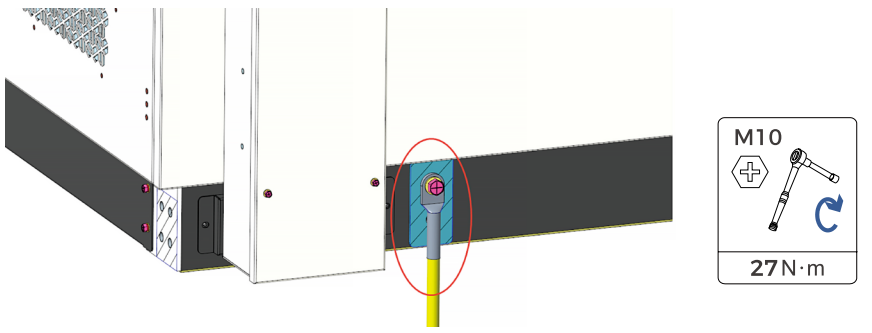

09 AIR CONDITIONING DRAIN PIPE INSTALLATION

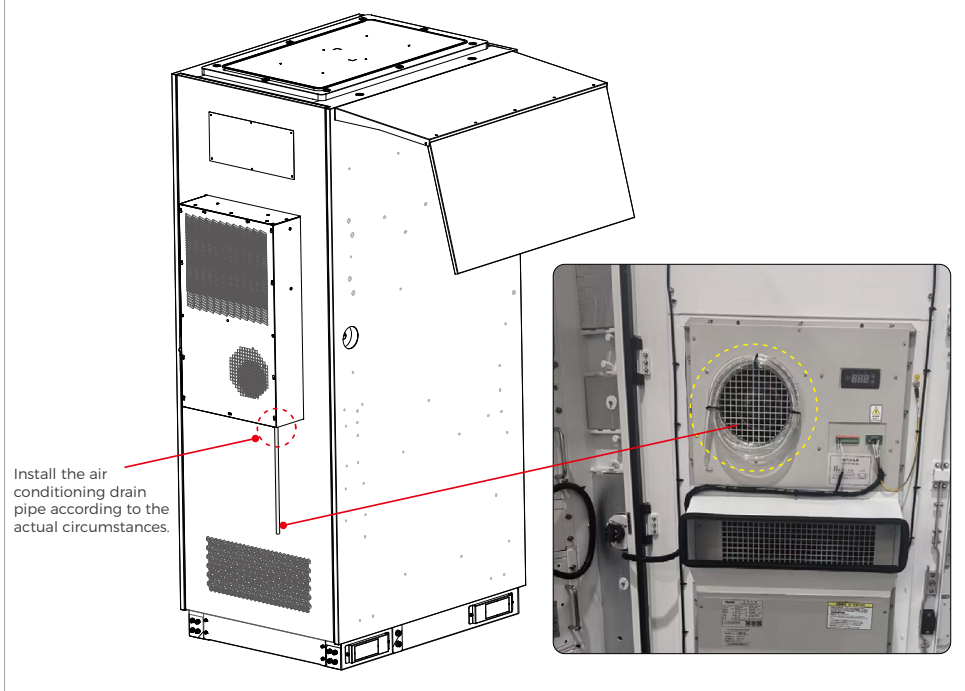

10 INSTALL THE CABLES

10.1 PREPARE THE REQUIRED CABLES AND OBTAIN THEM FROM THE SUPPLIED ACCESSORY KIT

1. Connect power cables between BCU and inverter

Connect the BCU power cables, ensuring correct cable polarity. Route the cables along the cabinet and cable trays, and fully insert the cable terminals until a "click" sound is heard.

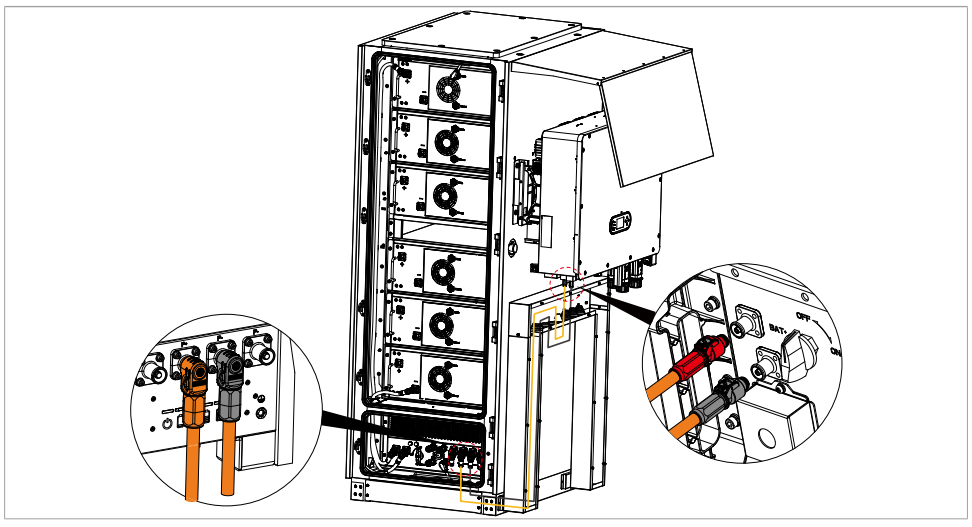

2. Connect communication cables between BCU and inverter.

2.1 BCU communication terminal waterproof cover

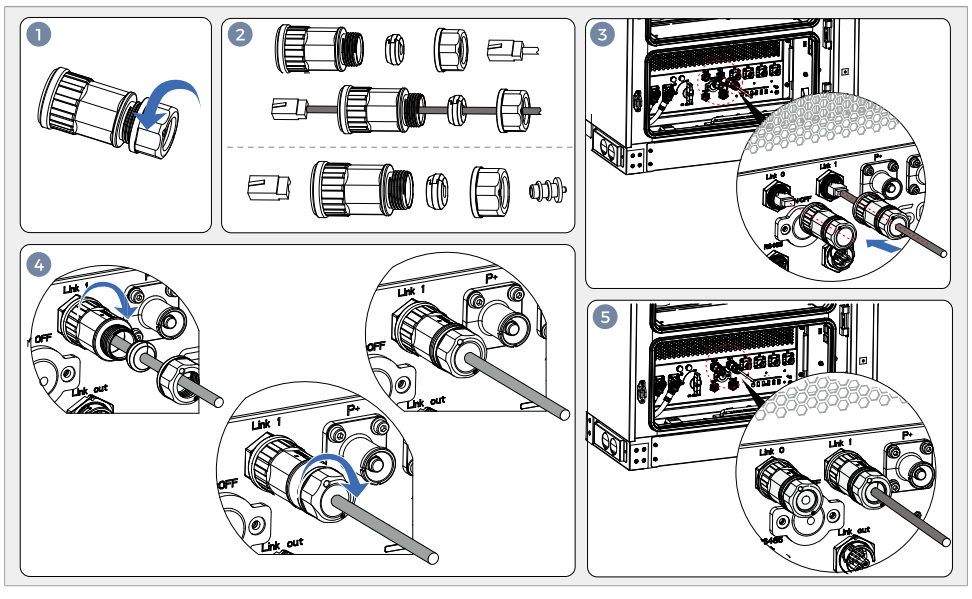

2.2 Route the communication cables along the cabinet and cable trays, and connect them to the inverter COM connector.

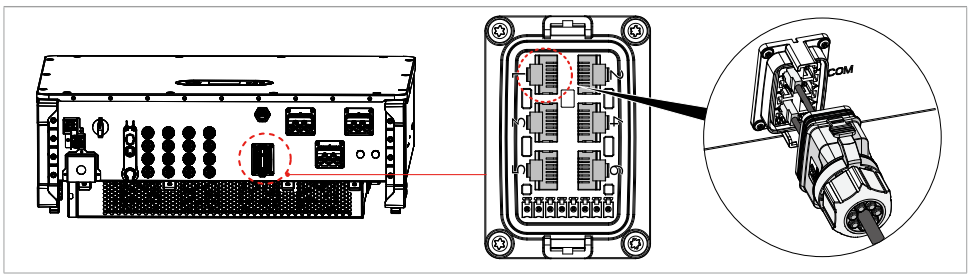

3. Connect power cables between cabinet and Inverter.

Route the dedicated cabinet power cables along the cabinet and cable trays, and connect them to the inverter load port.

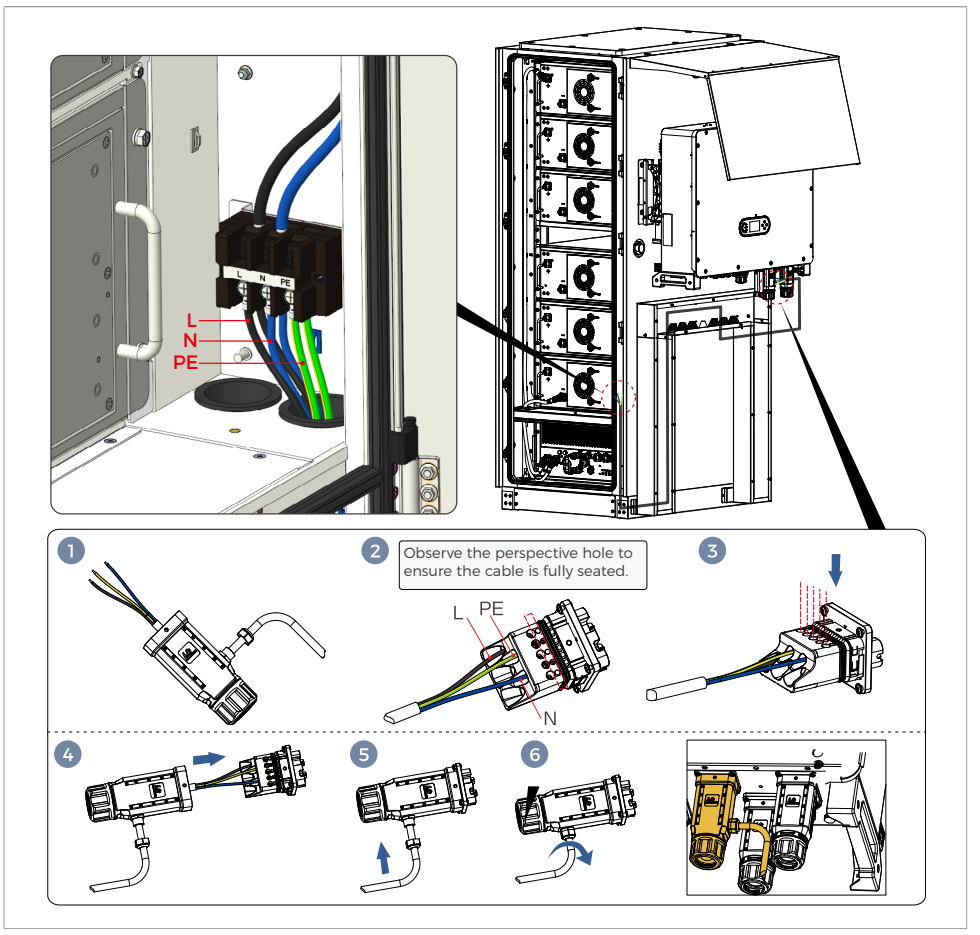

② Parallel power supply cable connection.

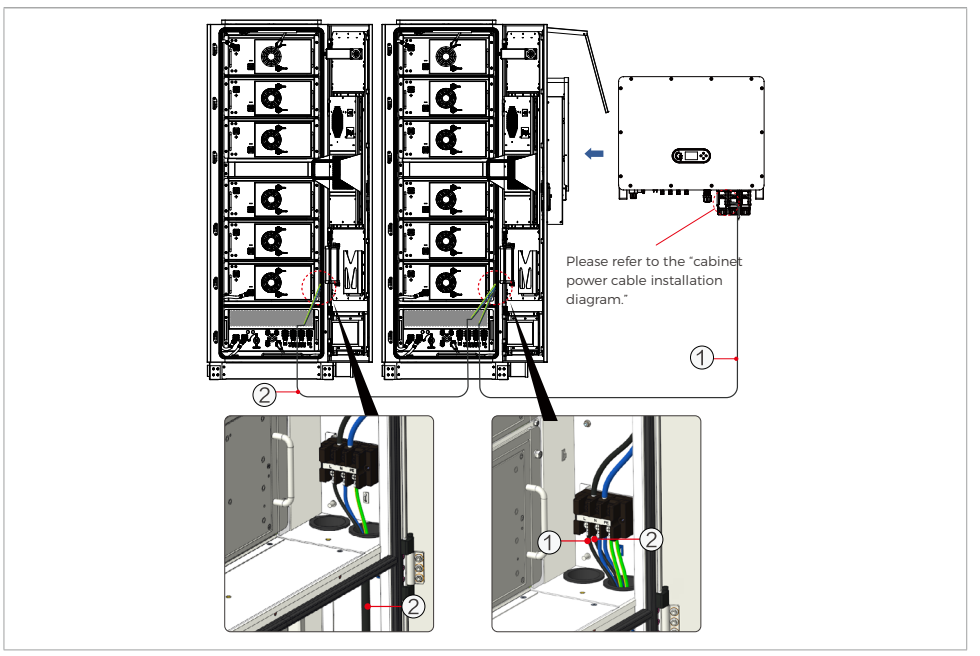

③ Parallel EPO button connection.

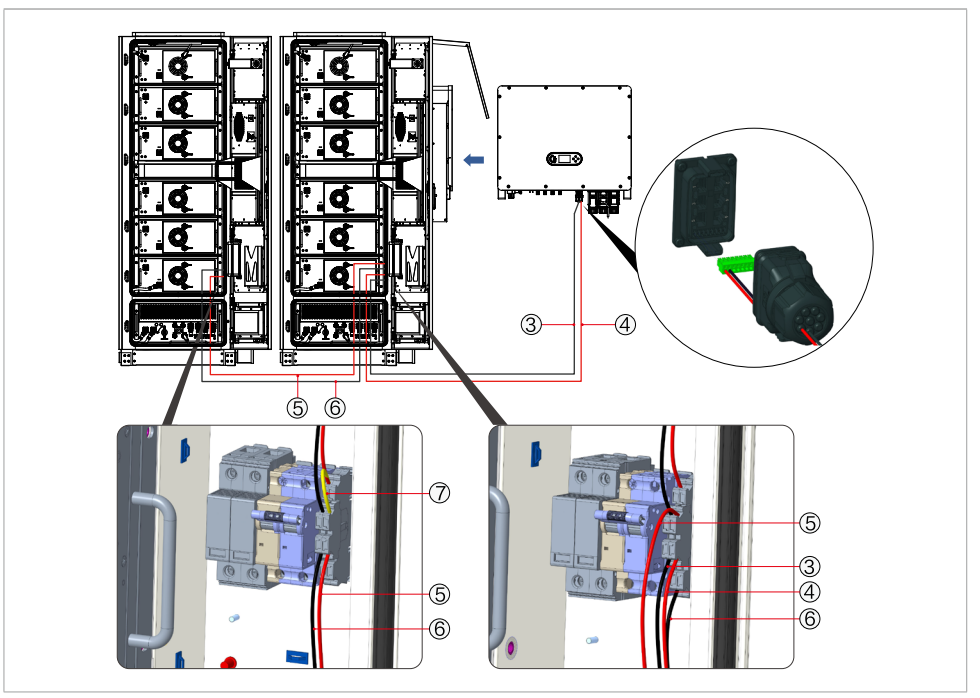

4. Emergency shutdown wiring.

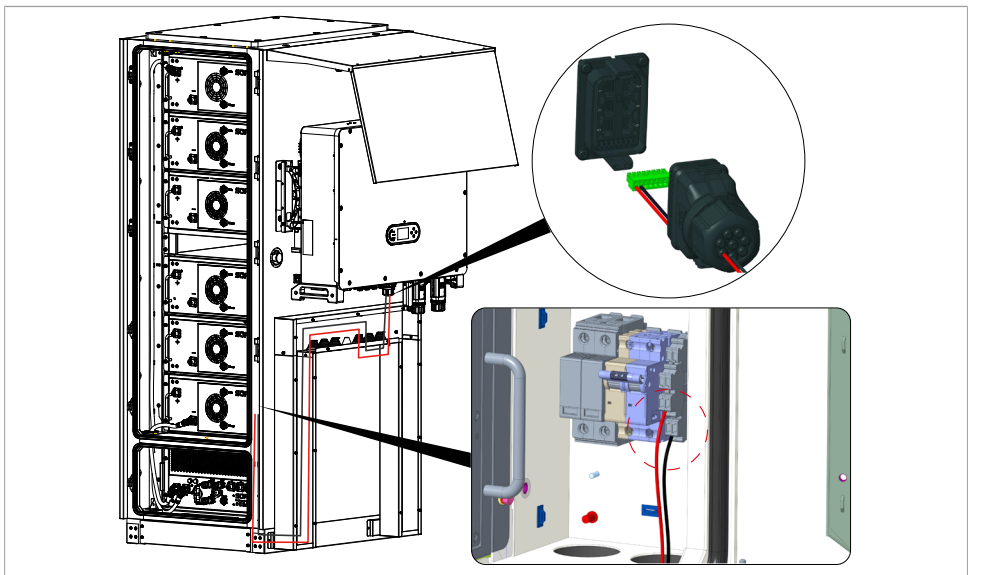

5. Parallel connection with inverter.

① Battery and communication cable connection.

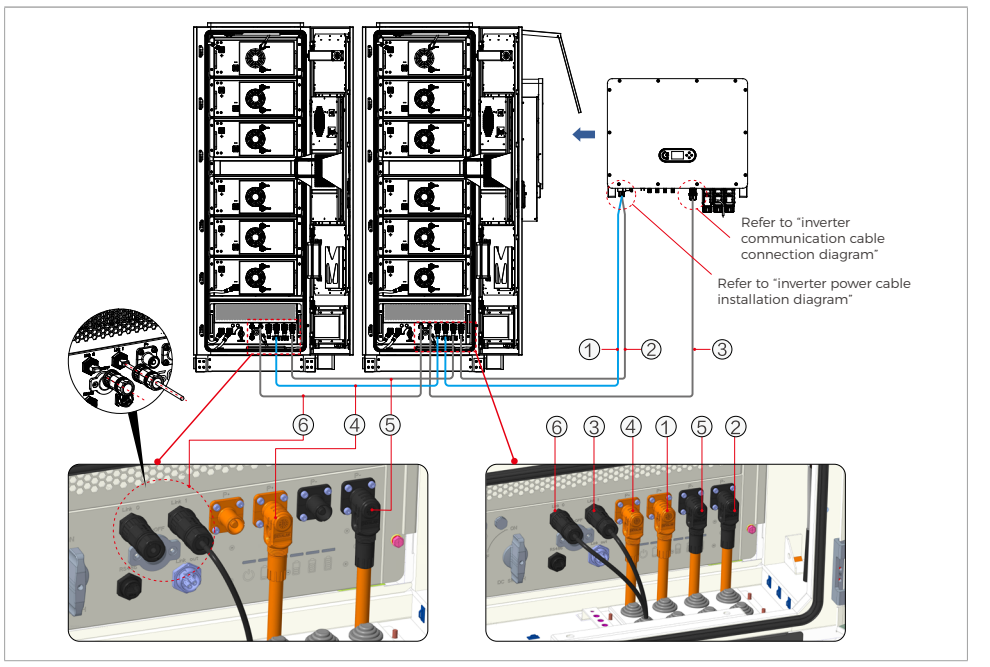

10.2 POST-WIRING OPERATIONS

After completing all electrical connections, a thorough and careful inspection must be carried out. In addition, the following actions are required:

- Seal the cable outlet holes of the energy storage cabinet and any surrounding gaps using fireproof and waterproof materials.
- All cover plates, door panels, and screws removed during wiring must be reinstalled and restored to their original positions.

11 POWER-ON OPERATION

11.1 POWER-ON STEPS

1. Turn on the inverter battery port switch.

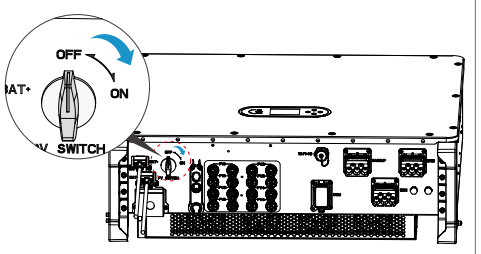

2. Turn on the cabinet circuit breaker.

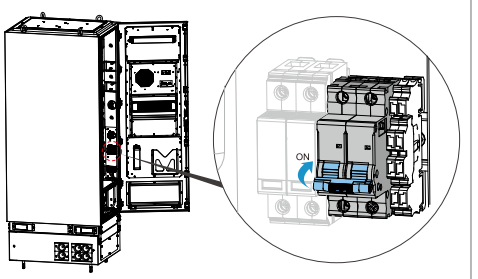

3. Turn on the DC battery switch.

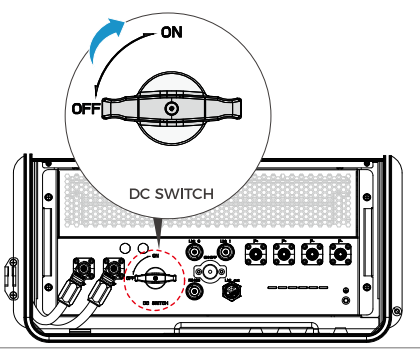

4. Turn on the DC battery switch

Press the BCU ON/OFF start button

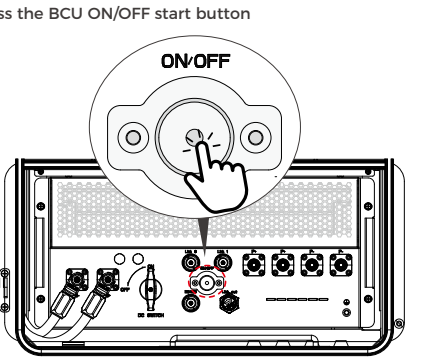

Guangdong SOFAR Smart Solar Technology Co., Ltd.
No.1, Dongsheng North Road, Chenjiang Street, Zhongkai High-tech Zone, Huizhou City, China
Web: www.sofarsolar.com
Email: info@sofarsolar.com

EU Representative Information: SofarSolar GmbH
Add.: Kraemerstrasse 20, 72764 Reutlingen, Germany
Tel: +49 (0)7121 31767-0
Email: europe@sofarsolar.com

Product user manual

After-sales service