LUNA2000-(107-241) Series Commercial and Industrial Hybrid Cooling Grid Forming ESS

User Manual

Issue	20
Date	2026-09-30



HUAWEI DIGITAL POWER TECHNOLOGIES CO., LTD.

Copyright © Huawei Digital Power Technologies Co., Ltd. 2026. All rights reserved.

No part of this document may be reproduced or transmitted in any form or by any means without prior written consent of Huawei Digital Power Technologies Co., Ltd.

Trademarks and Permissions


and other Huawei trademarks are the property of Huawei Technologies Co., Ltd.
All other trademarks and trade names mentioned in this document are the property of their respective holders.

Notice

The purchased products, services and features are stipulated by the contract made between Huawei Digital Power Technologies Co., Ltd. and the customer. All or part of the products, services and features described in this document may not be within the purchase scope or the usage scope. Unless otherwise specified in the contract, all statements, information, and recommendations in this document are provided "AS IS" without warranties, guarantees or representations of any kind, either express or implied. The information in this document is subject to change without notice. Every effort has been made in the preparation of this document to ensure accuracy of the contents, but all statements, information, and recommendations in this document do not constitute a warranty of any kind, express or implied.

Huawei Digital Power Technologies Co., Ltd.

Address: Office 01, 39th Floor, Block A, Antuoshan Headquarters Towers, 33 Antuoshan 6th Road, Futian District, Shenzhen, 518043, P.R.C.

Website: https://digitalpower.huawei.com

More Information

Huawei Digital Power Information Experience Center

https://info.support.huawei.com/Energy/info



About This Document

Purpose

This document describes the installation, electrical connections, commissioning, and troubleshooting of the following Smart String Energy Storage System (also referred to as ESS) models. Before installing and operating the ESS, read this document carefully to understand the safety information as well as functions and features of the ESS.

- LUNA2000-241-2S1-DS
- LUNA2000-241-2S1
- LUNA2000-215-2S10
- LUNA2000-215-2S11
- LUNA2000-161-2S11
- LUNA2000-107-1S11

Statement

In this document, LUNA only refers to a specific model of Huawei Smart String Grid Forming ESS.

Intended Audience

This document is intended for:

- Technical support engineers
- Installation engineers
- Commissioning engineers
- Maintenance engineers

Symbol Conventions

The symbols that may be found in this document are defined as follows.

 Copyright © Huawei Digital Power Technologies Co., Ltd.

Symbol	Description
DANGER	Indicates a hazard with a high level of risk which, if not avoided, will result in death or serious injury.
WARNING	Indicates a hazard with a medium level of risk which, if not avoided, could result in death or serious injury.
CAUTION	Indicates a hazard with a low level of risk which, if not avoided, could result in minor or moderate injury.
NOTICE	Indicates a potentially hazardous situation which, if not avoided, could result in equipment damage, data loss, performance deterioration, or unanticipated results. NOTICE is used to address practices not related to personal injury.
NOTE	Supplements the important information in the main text. NOTE is used to address information not related to personal injury, equipment damage, and environment deterioration.

Change History

Changes between document issues are cumulative. The latest document issue contains all the changes made in earlier issues.

Issue 20 (2026-09-30)

Updated **2.2 Label Description**.

Updated **2.5 Components**.

Updated **2.6.2 ESS Status**.

Updated **7.4 (Optional) Installing UPS AC Input Power Cables**.

Updated **7.6 (Optional) Installing the SmartLogger**.

Updated **12 Technical Specifications**.

Updated **A Grid Codes**.

Updated **C How Do I Repair Paint Damage?**

Updated **F Certificate Management and Maintenance**.

Issue 19 (2026-09-05)

Updated **6.4 Installing Ground Cables**.

Updated **7.8 Follow-up Procedure**.

Updated **9.2 Prerequisites**.

Updated **12 Technical Specifications**.

 Copyright © Huawei Digital Power Technologies Co., Ltd.

Issue 18 (2026-08-10)

Updated **2.5.1.3 PCS**.

Updated **5.1 Site Selection Requirements**.

Issue 17 (2026-07-05)

Added **2.2 Label Description**.

Updated **2.5.1.3 PCS**.

Updated **2.5.3.2 LTMS**.

Updated **7.1 Preparing Cables**.

Updated **12 Technical Specifications**.

Updated **A Grid Codes**.

Issue 16 (2026-04-25)

Updated **3.2 Loading and Unloading Requirements**.

Updated **5.4 Forklift Requirements**.

Updated **6.2 Preparing Tools**.

Updated **6.3 Installing the ESS**.

Updated **7.2 Installing PCS AC Power Cables**.

Updated **7.3 Installing the Auxiliary Power Supply Cable**.

Updated **7.4 (Optional) Installing UPS AC Input Power Cables**.

Updated **7.5.2 Installing Optical Fiber Communications Cables**.

Updated **7.6 (Optional) Installing the SmartLogger**.

Updated **7.7 Installing PACK Cables**.

Updated **7.8 Follow-up Procedure**.

Updated **8.2 Power-On Operations**.

Issue 15 (2026-03-31)

Updated **1.2 Electrical Safety**.

Updated **1.5.1 ESS Safety**.

Updated **1.5.2 Battery Safety**.

Updated **2.1 Model Description**.

Updated **2.5.1.2 PACK**.

Updated **2.5.1.4 DCDC**.

Updated **2.5.1.5 RCM**.

 Copyright © Huawei Digital Power Technologies Co., Ltd.

Updated **12 Technical Specifications**.

Updated **A Grid Codes**.

Issue 14 (2026-03-02)

Updated **2.5.3.2 LTMS**.

Updated **9 ESS Commissioning**.

Issue 13 (2026-02-10)

Updated **2.5 Components**.

Updated **9.2 Prerequisites**.

Updated **10.2 Power-Off Operations**.

Issue 12 (2026-01-05)

Updated **2.1 Model Description**.

Updated **2.5.1.2 PACK**.

Updated **2.5.1.4 DCDC**.

Updated **2.5.1.5 RCM**.

Updated **12 Technical Specifications**.

Updated **A Grid Codes**.

Issue 11 (2025-11-30)

Updated **2.7 Earthing Systems**.

Updated **3.2 Loading and Unloading Requirements**.

Updated **5.1 Site Selection Requirements**.

Updated **5.2 Installation and Maintenance Clearance Requirements**.

Updated **6.3 Installing the ESS**.

Updated **6.4 Installing Ground Cables**.

Updated **7.2 Installing PCS AC Power Cables**.

Updated **7.3 Installing the Auxiliary Power Supply Cable**.

Updated **9.2 Prerequisites**.

Updated **12 Technical Specifications**.

Issue 10 (2025-09-05)

Updated **6.3 Installing the ESS**.

Updated **8.1.2 ESS Installation Check**.

Updated **10.1 Power-Off Commands**.

 Copyright © Huawei Digital Power Technologies Co., Ltd.

Updated **A Grid Codes**.

Issue 09 (2025-07-30)

Updated **2.5 Components**.

Updated **4.4 Storage Requirements for Thermal Runaway Suppression System Equipment**.

Updated **6 Installation**.

Updated **7 Installing Cables**.

Updated **8.1.2 ESS Installation Check**.

Issue 08 (2025-05-13)

Updated **9.4 Commissioning the ESS (App)**.

Issue 07 (2025-04-18)

Updated **7.7 Installing PACK Cables**.

Updated **8 Powering On the ESS**.

Updated **10 Powering Off the ESS**.

Issue 06 (2025-03-31)

Added **A Grid Codes**.

Updated **2.1 Model Description**.

Updated **2.5.3.2 LTMS**.

Updated **7.3 Installing the Auxiliary Power Supply Cable**.

Updated **8 Powering On the ESS**.

Updated **9.3 Commissioning the ESS (SmartLogger WebUI)**.

Updated **10 Powering Off the ESS**.

Updated **12 Technical Specifications**.

Updated **F Certificate Management and Maintenance**.

Issue 05 (2025-02-05)

Updated **2 Overview**.

Updated **7 Installing Cables**.

Updated **8 Powering On the ESS**.

Updated **10.2 Power-Off Operations**.

Issue 04 (2024-12-31)

Added **2.5.1.4 DCDC**.

Updated **2.1 Model Description**.

Updated **2.5 Components**.

Updated **2.5.1.1 Power Supply and Distribution System Overview**.

Updated **2.5.1.2 PACK**.

Updated **2.5.1.3 PCS**.

Updated **2.5.1.5 RCM**.

Updated **2.6.1 Circuit Diagram**.

Updated **4.1 ESS Storage Requirements**.

Updated **4.2 Battery Storage and Recharge**.

Updated **7.7 Installing PACK Cables**.

Updated **8.1.1 General Check**.

Updated **12 Technical Specifications**.

Issue 03 (2024-12-12)

Added **3.2 Loading and Unloading Requirements**.

Updated **2.1 Model Description**.

Updated **2.5.1.3 PCS**.

Updated **5.1 Site Selection Requirements**.

Updated **5.2 Installation and Maintenance Clearance Requirements**.

Updated **6.3 Installing the ESS**.

Updated **7.2 Installing PCS AC Power Cables**.

Updated **7.6 (Optional) Installing the SmartLogger**.

Updated **8.2 Power-On Operations**.

Updated **10.2 Power-Off Operations**.

Updated **12 Technical Specifications**.

Updated **B Crimping an OT or DT Terminal**.

Issue 02 (2024-10-12)

Added **11 Alarm Reference**.

Updated **1.5.1 ESS Safety**.

Updated **2.5 Components**.

Updated **6.1 Pre-installation Check**.

Updated **7 Installing Cables**.

Updated **7.2 Installing PCS AC Power Cables**.

 Copyright © Huawei Digital Power Technologies Co., Ltd.

Updated **7.6 (Optional) Installing the SmartLogger**.

Updated **8.2 Power-On Operations**.

Updated **9 ESS Commissioning**.

Updated **9.2 Prerequisites**.

Issue 01 (2024-07-31)

This issue is the first official release.

Contents

About This Document ii

1 Safety Information 1

1.1 Personal Safety 2
1.2 Electrical Safety 4
1.3 Environment Requirements 8
1.4 Mechanical Safety 10
1.5 Equipment Safety 14
1.5.1 ESS Safety 14
1.5.2 Battery Safety 15

2 Overview 22

2.1 Model Description 22
2.2 Label Description 24
2.3 Product Description 28
2.4 Appearance 29
2.5 Components 29
2.5.1 Power Supply and Distribution System 34
2.5.1.1 Power Supply and Distribution System Overview 34
2.5.1.2 PACK 35
2.5.1.3 PCS 38
2.5.1.4 DCDC 43
2.5.1.5 RCM 45
2.5.2 Monitoring System 48
2.5.2.1 Monitoring System Overview 48
2.5.2.2 BCU 50
2.5.3 Environment Control System 51
2.5.3.1 Environment Control System Overview 52
2.5.3.2 LTMS 52
2.5.3.3 T/H Sensor 55
2.5.3.4 Door Status Sensor 55
2.5.3.5 Water Sensor 56
2.5.4 Thermal Runaway Suppression System 56
2.5.4.1 Thermal Runaway Suppression System Overview 57

 Copyright © Huawei Digital Power Technologies Co., Ltd.

2.5.4.2 Aerosol Fire Suppression Device 58
2.5.4.3 Heat Detector 58
2.5.4.4 CO Sensor 59
2.5.4.5 Smoke Detector 60
2.5.4.6 Fire Alarm Horn/Strobe 60
2.6 Working Principles 61
2.6.1 Circuit Diagram 61
2.6.2 ESS Status 61
2.7 Earthing Systems 63

3 Transportation Requirements 65
3.1 General Requirements 65
3.2 Loading and Unloading Requirements 67

4 Storage Requirements 69
4.1 ESS Storage Requirements 69
4.2 Battery Storage and Recharge 72
4.3 RCM/PCS/DCDC/LTMS Storage 78
4.4 Storage Requirements for Thermal Runaway Suppression System Equipment 78

5 Site Requirements 79
5.1 Site Selection Requirements 79
5.2 Installation and Maintenance Clearance Requirements 81
5.3 Foundation Requirements 83
5.4 Forklift Requirements 84
5.5 Hoisting Requirements 84

6 Installation 86
6.1 Pre-installation Check 86
6.2 Preparing Tools 88
6.3 Installing the ESS 91
6.4 Installing Ground Cables 99

7 Installing Cables 101
7.1 Preparing Cables 102
7.2 Installing PCS AC Power Cables 105
7.3 Installing the Auxiliary Power Supply Cable 106
7.4 (Optional) Installing UPS AC Input Power Cables 108
7.5 Installing Communications Cables 109
7.5.1 Installing an FE Communications Cable 109
7.5.2 Installing Optical Fiber Communications Cables 111
7.6 (Optional) Installing the SmartLogger 113
7.7 Installing PACK Cables 117
7.8 Follow-up Procedure 122

8 Powering On the ESS 125

 Copyright © Huawei Digital Power Technologies Co., Ltd.

8.1 Check Before Power-On ... 125
8.1.1 General Check ... 125
8.1.2 ESS Installation Check ... 126
8.2 Power-On Operations ... 128
9 ESS Commissioning ... 133
9.1 Commissioning Methods ... 133
9.2 Prerequisites ... 133
9.3 Commissioning the ESS (SmartLogger WebUI) ... 137
9.4 Commissioning the ESS (App) ... 137
10 Powering Off the ESS ... 138
10.1 Power-Off Commands ... 138
10.2 Power-Off Operations ... 138
11 Alarm Reference ... 141
12 Technical Specifications ... 142
A Grid Codes ... 149
B Crimping an OT or DT Terminal ... 155
C How Do I Repair Paint Damage? ... 158
D Emergency Handling ... 162
E How Do I Recycle Used Batteries? ... 165
F Certificate Management and Maintenance ... 166
F.1 Initial Certificate Risk Disclaimer ... 166
F.2 Application Scenarios of Initial Certificates ... 166
F.3 Initial Certificate Update Guide ... 167
F.4 Querying the Validity Period of an Identity Certificate ... 169
G Contact Information ... 170
H Digital Power Customer Service ... 172
I Acronyms and Abbreviations ... 173

 Copyright © Huawei Digital Power Technologies Co., Ltd.

1 Safety Information

Statement

Before transporting, storing, installing, operating, using, and/or maintaining the equipment, read this document, strictly follow the instructions provided herein, and follow all the safety instructions on the equipment and in this document. In this document, "equipment" refers to the products, software, components, spare parts, and/or services related to this document; "the Company" refers to the manufacturer (producer), seller, and/or service provider of the equipment; "you" refers to the entity that transports, stores, installs, operates, uses, and/or maintains the equipment.

The **DANGER**, **WARNING**, **CAUTION**, and **NOTICE** statements described in this document do not cover all the safety precautions. You also need to comply with relevant international, national, or regional standards and industry practices. **The Company shall not be liable for any consequences that may arise due to violations of safety requirements or safety standards concerning the design, production, and usage of the equipment.**

The equipment shall be used in an environment that meets the design specifications. Otherwise, the equipment may be faulty, malfunctioning, or damaged, which is not covered under the warranty. The Company shall not be liable for any property loss, personal injury, or even death caused thereby.

Comply with applicable laws, regulations, standards, and specifications during transportation, storage, installation, operation, use, and maintenance.

Do not perform reverse engineering, decompilation, disassembly, adaptation, implantation, or other derivative operations on the equipment software. Do not study the internal implementation logic of the equipment, obtain the source code of the equipment software, violate intellectual property rights, or disclose any of the performance test results of the equipment software.

The Company shall not be liable for any of the following circumstances or their consequences:

- Equipment damage due to force majeure such as earthquakes, floods, volcanic eruptions, debris flows, lightning strikes, fires, wars, armed conflicts, typhoons, hurricanes, tornadoes, and other extreme weather conditions
- Operation beyond the conditions specified in this document

 Copyright © Huawei Digital Power Technologies Co., Ltd.

- Installation or use in environments that do not comply with international, national, or regional standards
- Installation or use by unqualified personnel
- Failure to follow the operation instructions or safety precautions on the product or in this document
- Unauthorized modifications to the product or software code or removal of the product
- Damage caused during transportation by you or a third party authorized by you
- Storage conditions that do not meet the requirements specified in this document
- Failure to comply with local laws, regulations, or related standards due to the materials and tools prepared by you
- Damage caused by your or a third party's negligence, intentional breach, gross negligence, or improper operations or damage not caused by the Company

1.1 Personal Safety

DANGER

Ensure that power is off during installation. Do not install or remove a cable with power on. Transient contact between the core of the cable and the conductor will cause electric arcs, sparks, fire, or explosion, which may result in personal injury.

DANGER

Non-standard and improper operations on the energized equipment may cause fire, electric shocks, or explosion, resulting in property damage, personal injury, or even death.

DANGER

Before operations, remove conductive objects such as watches, bracelets, bangles, rings, and necklaces to prevent electric shocks.

DANGER

During operations, use dedicated insulated tools to prevent electric shocks or short circuits. The dielectric withstanding voltage level must comply with local laws, regulations, standards, and specifications.

 Copyright © Huawei Digital Power Technologies Co., Ltd.

WARNING

During operations, wear personal protective equipment such as protective clothing, insulated shoes, goggles, safety helmets, and insulated gloves.

General Requirements

- Do not stop protective devices. Pay attention to the warnings, cautions, and related precautionary measures in this document and on the equipment.
- If there is a likelihood of personal injury or equipment damage during operations, immediately stop, report the case to the supervisor, and take feasible protective measures.
- Do not power on the equipment before it is installed or confirmed by professionals.
- Do not touch the power supply equipment directly or with conductors such as damp objects. Before touching any conductor surface or terminal, measure the voltage at the contact point to ensure that there is no risk of electric shock.
- Do not touch operating equipment because the enclosure is hot.
- Do not touch a running fan with your hands, components, screws, tools, or boards. Otherwise, personal injury or equipment damage may occur.
- In the case of a fire, immediately leave the building or the equipment area and activate the fire alarm or call emergency services. Do not enter the affected building or equipment area under any circumstances.

Personnel Requirements

- Only professionals and trained personnel are allowed to operate the equipment.
  - Professionals: personnel who are familiar with the working principles and structure of the equipment, trained or experienced in equipment operations, and fully aware of the sources and degree of various potential hazards in equipment installation, operation, maintenance
  - Trained personnel: personnel who are trained in technology and safety, have required experience, are aware of possible hazards on themselves in certain operations, and are able to take protective measures to minimize the hazards on themselves and other people
- Personnel who plan to install or maintain the equipment must receive adequate training, be able to correctly perform all operations, and understand all necessary safety precautions and local relevant standards.
- Only qualified professionals or trained personnel are allowed to install, operate, and maintain the equipment.
- Only qualified professionals are allowed to remove safety facilities and inspect the equipment.
- Personnel who will perform special tasks such as electrical operations, working at heights, and operations of special equipment must possess the required local qualifications.
- Only certified high-voltage electricians are allowed to operate medium-voltage equipment.

 Copyright © Huawei Digital Power Technologies Co., Ltd.

- Only authorized professionals are allowed to replace the equipment or components (including software).
- Only personnel who need to work on the equipment are allowed to access the equipment.

1.2 Electrical Safety

DANGER

Before connecting cables, ensure that the equipment is intact. Otherwise, electric shocks or fires may occur.

DANGER

Non-standard and improper operations may result in fire or electric shocks.

DANGER

Prevent foreign matter from entering the equipment during operations. Otherwise, short circuits, equipment damage, load power derating, power failure, or personal injury may occur.

WARNING

For the equipment that needs to be grounded, install the ground cable first when installing the equipment and remove the ground cable last when removing the equipment.

CAUTION

Do not route cables near the air intake or exhaust vents of the equipment.

CAUTION

The components (such as power distribution boxes, circuit breakers, and cables) used for electrical connections shall comply with fire resistance and flame retardance standards. The materials and structure shall meet fire safety requirements.

 Copyright © Huawei Digital Power Technologies Co., Ltd.

General Requirements

- Follow the procedures described in the document for installation, operation, and maintenance. Do not modify, retrofit, or alter the equipment without authorization (including, but not limited to, adding or removing components and cables), and do not change the installation sequence.
- Obtain approval from the national or local electric utility company before connecting the equipment to the grid.
- Observe the power plant safety regulations, such as the operation and work ticket mechanisms.
- Install temporary fences or warning ropes and hang "No Entry" signs around the operation area to keep unauthorized personnel away from the area.
- Before installing or removing power cables, turn off the switches of the equipment and its upstream and downstream switches.
- If any liquid is detected inside the equipment, disconnect the power supply immediately and do not use the equipment.
- Before performing operations on the equipment, check that all tools meet the requirements and record the tools. After the operations are complete, collect all of the tools to prevent them from being left inside the equipment.
- Before installing power cables, check that cable labels are correct and cable terminals are insulated.
- When installing the equipment, use a torque tool of a proper measurement range to tighten the screws. When using a wrench to tighten the screws, ensure that the wrench does not tilt and the torque error does not exceed 10% of the specified value.
- Ensure that bolts are tightened with a torque tool and marked in red and blue after double-check. Installation personnel mark tightened bolts in blue. Quality inspection personnel confirm that the bolts are tightened and then mark them in red. (The marks must cross the edges of the bolts.)

  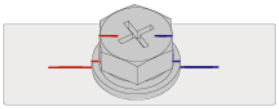
  CZ0000112
- After the installation is complete, ensure that protective cases, insulation tubes, and other necessary items for all electrical components are in position to avoid electric shocks.
- If the equipment has multiple inputs, disconnect all the inputs and wait until the equipment is completely powered off before performing operations on the equipment.
- Before maintaining a downstream electrical or power distribution device, turn off the output switch on the power supply equipment.
- During equipment maintenance, attach "No switching on" labels near the upstream and downstream switches or circuit breakers as well as warning signs to prevent accidental connection. The equipment can be powered on only after troubleshooting is complete.
- If fault diagnosis and troubleshooting need to be performed after power-off, take the following safety measures: Disconnect the power supply. Check whether the equipment is live. Install a ground cable. Hang warning signs and set up fences.

 Copyright © Huawei Digital Power Technologies Co., Ltd.

- Check equipment connections periodically, ensuring that all screws are securely tightened.
- Only qualified professionals can replace a damaged cable.
- Do not scrawl, damage, or block any labels or nameplates on the equipment. Promptly replace labels that have worn out.
- Do not use solvents such as water, alcohol, or oil to clean electrical components inside or outside of the equipment.

Grounding

- Ensure that the grounding impedance of the equipment complies with local electrical standards.
- Ensure that the equipment is connected permanently to the protective ground. Before operating the equipment, check its electrical connection to ensure that it is reliably grounded.
- Do not operate the equipment in the absence of a properly installed ground conductor.
- Do not damage the ground conductor.
- If high touch current may occur on the equipment, ground the protective ground terminal on the equipment enclosure before connecting the power supply; otherwise, electric shock as a result of touch current may occur.

Cabling Requirements

- When selecting, installing, and routing cables, follow local safety regulations and rules.
- When routing power cables, ensure that there is no coiling or twisting. Do not join or weld power cables. If necessary, use a longer cable.
- Ensure that all cables are properly connected and insulated, and meet specifications.
- Ensure that the cables are protected from mechanical stress, overheating, and corrosion.
- Ensure that cables are not squeezed, torn, warped, or whitened.
- Ensure that the slots and holes for routing cables are free from sharp edges, and that the positions where cables are routed through pipes or cable holes are equipped with cushion materials to prevent the cables from being damaged by sharp edges or burrs.
- If a cable is routed into the cabinet from the top, bend the cable in a U shape outside the cabinet and then route it into the cabinet.
- Ensure that cables of the same type are bound together neatly and straight and that the cable sheath is intact. When routing cables of different types, ensure that they are at least 30 mm away from each other without entanglement and overlapping.
- When cable connection is completed or paused for a short period of time, seal the cable holes with sealing putty immediately to prevent small animals or moisture from entering.
- Secure buried cables using cable supports and cable clips. Ensure that the cables in the backfill area are in close contact with the ground to prevent cable deformation or damage during backfilling.

- If the external conditions (such as the cable layout or ambient temperature) change, verify the cable usage in accordance with the IEC-60364-5-52 or local laws and regulations. For example, check that the current-carrying capacity meets requirements.
- When routing cables, reserve at least 30 mm clearance between the cables and heat-generating components or areas. This prevents deterioration or damage to the cable insulation layer.
- When the temperature is low, violent impact or vibration may damage the plastic cable sheathing. To ensure safety, comply with the following requirements:
  - Cables can be laid or installed only when the temperature is higher than 0°C. Handle cables with caution, especially at a low temperature.
  - Cables stored at below 0°C must be stored at room temperature for more than 24 hours before they are laid out.
- Do not perform any improper operations, for example, dropping cables directly from a vehicle. Otherwise, the cable performance may deteriorate due to cable damage, which affects the current-carrying capacity and temperature rise.

ESD

NOTICE

The static electricity generated by human bodies may damage the electrostatic-sensitive components on boards, for example, the large-scale integrated (LSI) circuits.

- When touching the equipment and handling boards, modules with exposed circuit boards, or application-specific integrated circuits (ASICs), observe ESD protection regulations and wear ESD clothing and ESD gloves or a well-grounded ESD wrist strap.

Figure 1-1 Wearing an ESD wrist strap

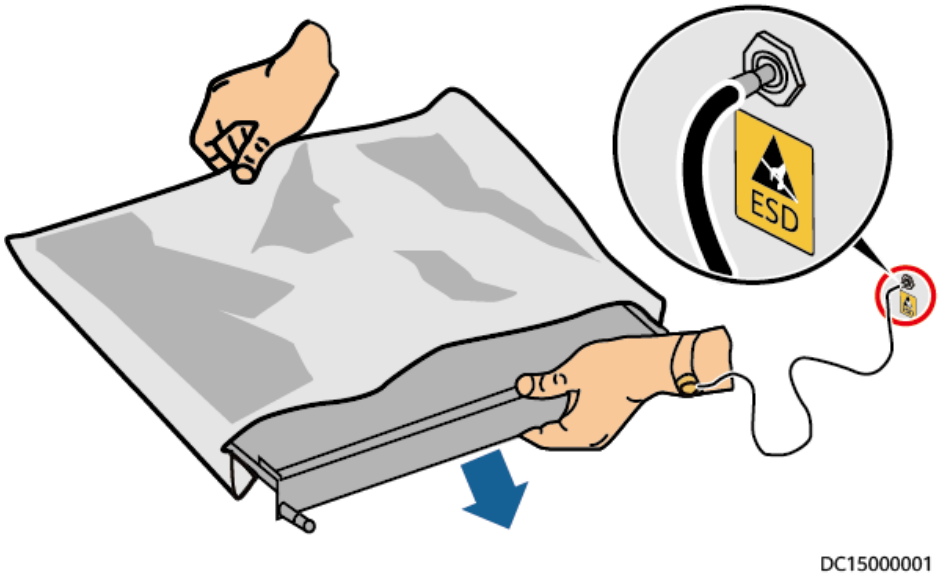

 Copyright © Huawei Digital Power Technologies Co., Ltd.

- When holding a board or a module with exposed circuit boards, hold its edge without touching any components. Do not touch the components with bare hands.
- Package boards or modules with ESD packaging materials before storing or transporting them.

1.3 Environment Requirements

DANGER

Do not expose the equipment to flammable or explosive gas or smoke. Do not perform any operation on the equipment in such environments.

DANGER

Do not store any flammable or explosive materials in the equipment area.

DANGER

Do not place the equipment near heat sources or fire sources, such as smoke, candles, heaters, or other heating devices. Overheating may damage the equipment or cause a fire.

WARNING

Install the equipment in an area far away from liquids. Do not install it under areas prone to condensation, such as under water pipes and air exhaust vents, or areas prone to water leakage, such as air conditioner vents, ventilation vents, or feeder windows of the equipment room. Ensure that no liquid enters the equipment to prevent faults or short circuits.

WARNING

To prevent damage or fire due to high temperature, ensure that the ventilation vents or heat dissipation systems are not obstructed or covered by other objects while the equipment is running.

General Requirements

- Ensure that the equipment is stored in a clean, dry, and well ventilated area with proper temperature and humidity and is protected from dust and condensation.

 Copyright © Huawei Digital Power Technologies Co., Ltd.

- Keep the installation and operating environments of the equipment within the allowed ranges. Otherwise, its performance and safety will be compromised.
- Do not install, use, or operate outdoor equipment and cables (including but not limited to moving equipment, operating equipment and cables, inserting connectors to or removing connectors from signal ports connected to outdoor facilities, working at heights, performing outdoor installation, and opening doors) in harsh weather conditions such as lightning, rain, snow, and level 6 or stronger wind.
- Do not install the equipment in an environment with dust, smoke, volatile or corrosive gases, infrared and other radiations, organic solvents, or salty air.
- Do not install the equipment in an environment with conductive metal or magnetic dust.
- Do not install the equipment in an area conducive to the growth of microorganisms such as fungus or mildew.
- Do not install the equipment in an area with strong vibration, noise, or electromagnetic interference.
- Ensure that the site complies with local laws, regulations, and related standards.
- Ensure that the ground in the installation environment is solid, free from spongy or soft soil, and not prone to subsidence. The site must not be located in a low-lying land prone to water or snow accumulation, and the horizontal level of the site must be above the highest water level of that area in history.
- Do not install the equipment in a position that may be submerged in water.
- If the equipment is installed in a place with abundant vegetation, in addition to routine weeding, harden the ground underneath the equipment using cement or gravel.
- Before opening doors during the installation, operation, and maintenance of the equipment, clean up any water, ice, snow, or other foreign objects on the top of the equipment to prevent foreign objects from falling into the equipment.
- When installing the equipment, ensure that the installation surface is solid enough to bear the weight of the equipment.
- All cable holes must be sealed. Seal the used cable holes with sealing putty. Seal the unused cable holes with the caps delivered with the equipment. The following figure shows the criteria for correct sealing with sealing putty.

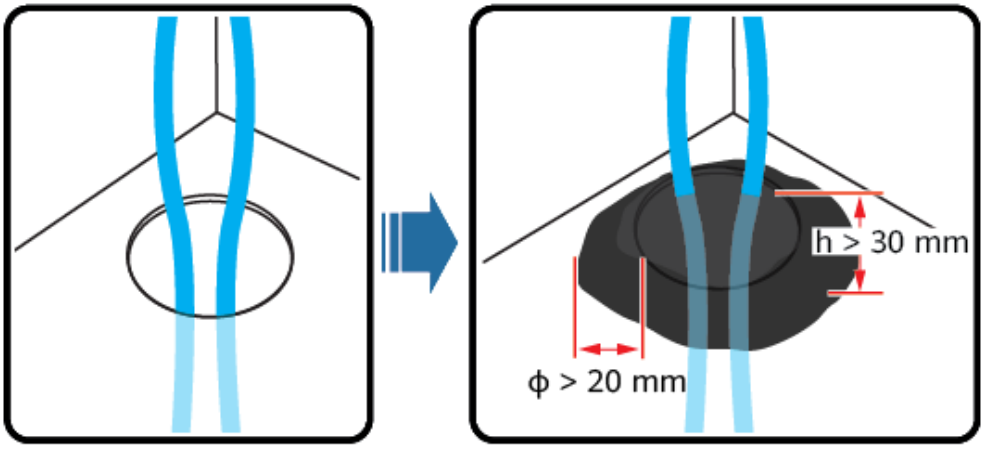

TN01H00006

 Copyright © Huawei Digital Power Technologies Co., Ltd.

- After installing the equipment, remove the packing materials such as cartons, foam, plastics, and cable ties from the equipment area.

1.4 Mechanical Safety

DANGER

When working at heights, wear a safety helmet and safety harness or waist belt and fasten it to a solid structure. Do not mount it on an insecure moveable object or a metal object with sharp edges. Make sure that the hooks will not slide off.

WARNING

Ensure that all necessary tools are ready and inspected by a professional organization. Do not use tools that have signs of scratches or fail to pass the inspection or whose inspection validity period has expired. Ensure that the tools are secure and not overloaded.

WARNING

Before installing equipment in a cabinet, ensure that the cabinet is securely fastened with a balanced center of gravity. Otherwise, tipping or falling cabinets may cause bodily injury and equipment damage.

WARNING

When pulling equipment out of a cabinet, be aware of unstable or heavy objects in the cabinet to prevent injury.

WARNING

Do not drill holes into the equipment. Doing so may affect the sealing performance and electromagnetic containment of the equipment and damage components or cables inside. Metal shavings from drilling may short-circuit boards inside the equipment.

General Requirements

- Repaint any paint scratches caused during equipment transportation or installation in a timely manner. Equipment with scratches must not be exposed for an extended period of time.
- Do not perform operations such as arc welding and cutting on the equipment without evaluation by the Company.

 Copyright © Huawei Digital Power Technologies Co., Ltd.

- Do not install other devices on the top of the equipment without evaluation by the Company.
- When performing operations over the top of the equipment, take measures to protect the equipment against damage.
- Use correct tools and operate them in the correct way.

Moving Heavy Objects

- Be cautious to prevent injury when moving heavy objects.

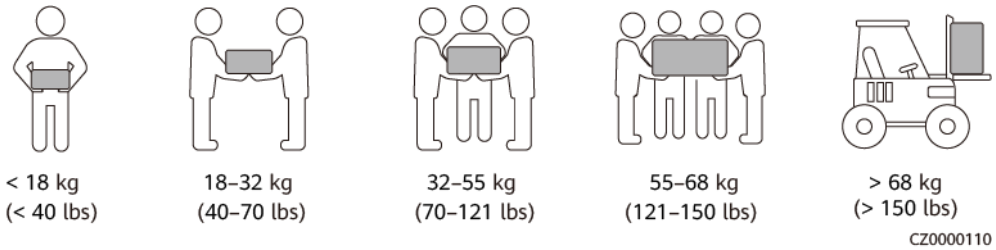

- If multiple persons need to move a heavy object together, determine the manpower and work division with consideration of height and other conditions to ensure that the weight is equally distributed.
- If two persons or more move a heavy object together, ensure that the object is lifted and landed simultaneously and moved at a uniform pace under the supervision of one person.
- Wear personal protective gears such as protective gloves and shoes when manually moving the equipment.
- To move an object by hand, approach to the object, squat down, and then lift the object gently and stably by the force of the legs instead of your back. Do not lift it suddenly or turn your body around.
- Move or lift the equipment by holding its handles or lower edges. Do not hold the handles of modules that are installed in the equipment.
- Do not quickly lift a heavy object above your waist. Place the object on a workbench that is half-waist high or any other appropriate place, adjust the positions of your palms, and then lift it.
- Move a heavy object stably with balanced force at an even and low speed. Put down the object stably and slowly to prevent any collision or drop from scratching the surface of the equipment or damaging the components and cables.
- When moving a heavy object, be aware of the workbench, slope, staircase, and slippery places. When moving a heavy object through a door, ensure that the door is wide enough to move the object and avoid bumping or injury.
- When transferring a heavy object, move your feet instead of turning your waist around. When lifting and transferring a heavy object, ensure that your feet point to the target direction of movement.
- When transporting the equipment using a pallet truck or forklift, ensure that the tynes are properly positioned so that the equipment does not topple. Before moving the equipment, secure it to the pallet truck or forklift using ropes. When moving the equipment, assign dedicated personnel to take care of it.
- Ensure that tilt angle of the cabinet meets the requirements shown in the figure. The tilt angle α of a cabinet with packaging must be less than or equal

to 15°. After the cabinet is unpacked, its tilt angle α must be less than or equal to 10°.

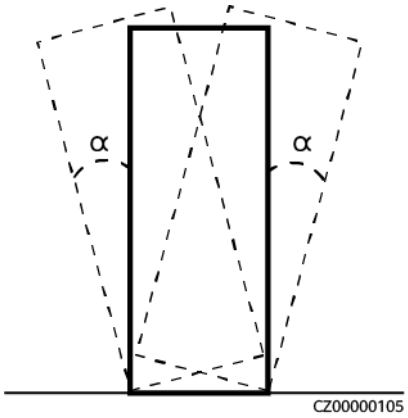

Working at Heights

- Any operations performed 2 m or higher above the ground must be supervised properly.
- Only trained and qualified personnel are allowed to work at heights.
- Do not work at heights when steel pipes are wet or other risky situations exist. After the preceding conditions no longer exist, the safety owner and relevant technical personnel need to check the involved equipment. Operators can begin working only after safety is confirmed.
- Set a restricted area and prominent signs for working at heights to warn away irrelevant personnel.
- Set guard rails and warning signs at the edges and openings of the area involving working at heights to prevent falls.
- Do not pile up scaffolding, scaffold planks, or other objects on the ground under the area involving working at heights. Do not allow people to stay or pass under the area involving working at heights.
- Carry operation machines and tools properly to prevent equipment damage or personal injury caused by falling objects.
- Personnel involving working at heights are not allowed to throw objects from the height to the ground, or vice versa. Objects shall be transported by slings, hanging baskets, aerial work platforms, or cranes.
- Do not perform operations on the upper and lower layers at the same time. If unavoidable, install a dedicated protective shelter between the upper and lower layers or take other protective measures. Do not pile up tools or materials on the upper layer.
- Dismantle the scaffolding from top down after finishing the job. Do not dismantle the upper and lower layers at the same time. When removing a part, ensure that other parts will not collapse.
- Ensure that personnel working at heights strictly comply with the safety regulations. The Company is not responsible for any accident caused by violation of the safety regulations on working at heights.
- Behave cautiously when working at heights. Do not rest at heights.

Using Ladders

- Use wooden or insulated ladders when you need to perform live-line working at heights.
- Platform ladders with protective rails are preferred. Do not use single ladders.
- Before using a ladder, check that it is intact and confirm its load bearing capacity. Do not overload it.
- Ensure that the ladder is securely positioned and held firm.



CZ00000107

- When climbing up the ladder, keep your body stable and your center of gravity between the side rails, and do not overreach to the sides.
- When a step ladder is used, ensure that the pull ropes are secured.

Hoisting

- Only trained and qualified personnel are allowed to perform hoisting operations.
- Install temporary warning signs or fences to isolate the hoisting area.
- Ensure that the foundation where hoisting is performed meets the load-bearing requirements.
- Before hoisting objects, ensure that hoisting tools are firmly secured onto a fixed object or wall that meets the load-bearing requirements.
- During hoisting, do not stand or walk under the crane or the hoisted objects.
- Do not drag steel ropes and hoisting tools or bump the hoisted objects against hard objects during hoisting.
- Ensure that the angle between two hoisting ropes is no more than 90 degrees, as shown in the following figure.

 Copyright © Huawei Digital Power Technologies Co., Ltd.

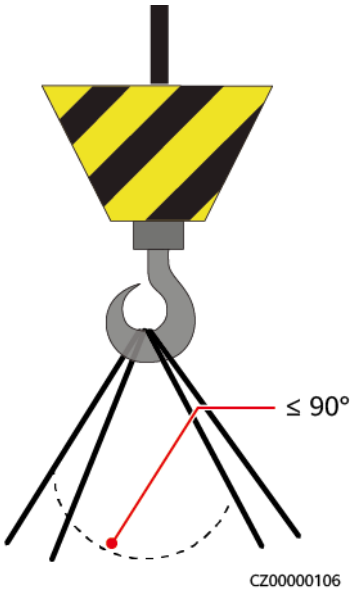

Drilling Holes

- Obtain consent from the customer and contractor before drilling holes.
- Wear protective equipment such as safety goggles and protective gloves when drilling holes.
- To avoid short circuits or other risks, do not drill holes into buried pipes or cables.
- When drilling holes, protect the equipment from shavings. After drilling, clean up any shavings.

1.5 Equipment Safety

1.5.1 ESS Safety

DANGER

Do not open cabinet doors when the system is running.

DANGER

If the ESS is faulty, do not stand within the opening range of the cabinet doors.

CAUTION

Evacuate from the site immediately once the fire alarm horn/strobe is triggered.

 Copyright © Huawei Digital Power Technologies Co., Ltd.

- When installing the ESS, comply with the fire separation distance or fire wall requirements specified in local standards, including but not limited to GB/T 51048-2025 *Standard for design of electrochemical energy storage station* and NFPA 855 *Standard for the Installation of Stationary Energy Storage Systems*.
- Check the fire safety of the ESS regularly, at least once a month.
- When inspecting the system with power on, pay attention to the hazard warning signs on the equipment. Do not stand at the battery cabin doors.
- After power components of the ESS are replaced or cable connections are changed, you need to manually start cable connection detection to prevent system malfunction.
- Do not insert or remove the auxiliary power module of the LTMS with power on.
- It is recommended that you prepare a camera to record the detailed processes of equipment installation, operation, and maintenance.

1.5.2 Battery Safety

DANGER

Do not connect the positive and negative poles of a battery together. Otherwise, the battery may be short-circuited. Battery short circuits can generate high instantaneous current and release a large amount of energy, which may cause battery leakage, smoke, flammable gas release, thermal runaway, fire, or explosion. To avoid battery short circuits, do not maintain batteries with power on.

DANGER

Do not expose batteries at high temperatures or around heat sources, such as scorching sunlight, fire sources, transformers, and heaters. Battery overheating may cause leakage, smoke, flammable gas release, thermal runaway, fire, or explosion.

DANGER

Protect batteries from mechanical vibration, falling, collision, punctures, and strong impact. Otherwise, the batteries may be damaged or catch fire.

DANGER

To avoid leakage, smoke, flammable gas release, thermal runaway, fire, or explosion, do not disassemble, alter, or damage batteries, for example, insert foreign objects into batteries, squeeze batteries, or immerse batteries in water or other liquids.

 Copyright © Huawei Digital Power Technologies Co., Ltd.

DANGER

Do not touch battery terminals with other metal objects, which may cause heat or electrolyte leakage.

DANGER

There is a risk of fire or explosion if the model of the battery in use or used for replacement is incorrect. Use a battery of the model recommended by the manufacturer.

DANGER

Battery electrolyte is toxic and volatile. Do not come into contact with leaked liquids or gases in the case of battery leakage or emission of abnormal odor. In such cases, stay away from the battery and contact professionals immediately. Professionals shall wear safety goggles, rubber gloves, gas masks, and protective clothing, power off the equipment, remove the battery, and contact technical engineers.

DANGER

A battery is an enclosed system and will not release any gases under normal operations. If a battery is improperly treated, for example, burnt, needle-pricked, squeezed, struck by lightning, overcharged, or subject to other adverse conditions that may cause battery thermal runaway, the battery may be damaged or an abnormal chemical reaction may occur inside the battery, resulting in electrolyte leakage or production of gases such as CO and H_2. To prevent fire or device corrosion, ensure that flammable gas is properly exhausted.

DANGER

The gas generated by a burning battery may irritate your eyes, skin, and throat. Take protective measures promptly.

WARNING

Install batteries in an area far away from liquids. Do not install it under areas prone to condensation, such as under water pipes and air exhaust vents, or areas prone to water leakage, such as air conditioner vents, ventilation vents, or feeder windows of the equipment room. Ensure that no liquid enters the equipment to prevent faults or short circuits.

 Copyright © Huawei Digital Power Technologies Co., Ltd.

WARNING

Before installing and commissioning batteries, prepare fire fighting facilities, such as fire sand and carbon dioxide fire extinguishers, according to construction standards and regulations. Before putting into operation, ensure that fire fighting facilities that comply with local laws and regulations are installed.

WARNING

Before unpacking, storage, and transportation, ensure that the packing cases are intact and the batteries are correctly placed according to the labels on the packing cases. Do not place a battery upside down or vertically, lay it on one side, or tilt it. Stack the batteries according to the stacking requirements on the packing cases. Ensure that the batteries do not fall or get damaged. Otherwise, they will need to be scrapped.

WARNING

After unpacking batteries, place them in the required direction. Do not place a battery upside down or vertically, lay it on one side, tilt it, or stack it. Ensure that the batteries do not fall or get damaged. Otherwise, they will need to be scrapped.

WARNING

Tighten the screws on copper bars or cables to the torque specified in this document. Periodically confirm whether the screws are tightened, check for rust, corrosion, or other foreign objects, and clean them up if any. Loose screw connections will result in excessive voltage drops and batteries may catch fire when the current is high.

WARNING

After batteries are discharged, charge them in time to avoid damage due to overdischarge. Do not leave batteries at a low voltage or low SOC for extended periods. Battery damage caused by overdischarge in any of the following cases is not covered by the Company's warranty.

- The cell voltage is ≤ 2.7 V for 120 consecutive hours.
- The battery SOC is 0% for 120 consecutive hours.
- The cell voltage is < 2 V.

 Copyright © Huawei Digital Power Technologies Co., Ltd.

WARNING

If a **Battery Pack Overvoltage**, **Battery Pack Undervoltage**, or **Battery Faulty** alarm is generated, rectify the fault promptly by referring to the alarm handling suggestions to prevent battery damage caused by overdischarge or overcharge. Such damage is not covered by the Company's warranty.

Statement

The Company shall not be liable for any battery damage, personal injury, death, property loss, and/or other consequences caused by the following reasons:

- Force majeure such as earthquakes, floods, volcanic eruptions, debris flows, lightning strikes, fires, wars, armed conflicts, typhoons, hurricanes, tornadoes, and other extreme weather conditions
- The battery warranty period has expired.
- Actions that do not follow instructions in the user manual or direct advice from the Company, including but not limited to the following scenarios:
  - The onsite equipment storage and operating environment or external power parameters do not meet the environment requirements for normal operation, for example, the actual operating temperature of batteries is too high or too low, or the power grid is unstable and experiences outages frequently.
  - Batteries are dropped or incorrectly operated or connected.
  - Batteries are overdischarged due to delayed acceptance or power-on after battery installation.
  - Battery running parameters are incorrectly set.
  - Different types of batteries, for example, batteries of different brands or rated capacities, are used together without prior approval from the Company.
  - Batteries are frequently overdischarged due to improper battery maintenance.
  - Battery use scenarios are changed without prior approval from the Company.
  - Battery maintenance is not performed according to the instructions in the user manual, for example, failing to check battery terminals regularly.
  - Batteries are not transported, stored, or charged according to the instructions in the user manual.
  - Instructions from the Company are not followed during battery relocation or reinstallation.

 Copyright © Huawei Digital Power Technologies Co., Ltd.

General Requirements

NOTICE

To ensure battery safety and battery management accuracy, use batteries provided by the Company. The Company is not responsible for any faults of batteries not provided by it.

- Before installing, operating, and maintaining batteries, read the battery manufacturer's instructions and comply with their requirements. The safety precautions specified in this document are highly important and require special attention. For additional safety precautions, see the instructions provided by the battery manufacturer.
- Use batteries within the specified temperature range. When the ambient temperature of the batteries is lower than the allowed range, do not charge the batteries to prevent internal short circuits caused during low-temperature charging.
- Do not use a damaged battery (such as damage caused when a battery is dropped, bumped, bulged, or dented on the enclosure), because the damage may cause electrolyte leakage or flammable gas release. In the case of electrolyte leakage or structural deformation, contact the installer or professional O&M personnel immediately to remove or replace the battery. Do not store the damaged battery near other devices or flammable materials and keep it away from non-professionals.
- Before working on a battery, ensure that there is no irritating or burning smell around the battery.
- When installing batteries, do not place installation tools, metal parts, or sundries on the batteries. After the installation is complete, clean up the objects on the batteries and the surrounding area.
- Check whether the positive and negative battery terminals are grounded unexpectedly. If so, disconnect the battery terminals from the ground.
- Do not perform welding or grinding work around batteries to prevent fire caused by electric sparks or arcs.
- If batteries are left unused for a long period of time, store and charge them according to the battery requirements.
- Do not charge or discharge batteries by using a device that does not comply with local laws and regulations.
- Keep the battery loop disconnected during installation and maintenance.
- Monitor damaged batteries during storage for signs of smoke, flame, electrolyte leakage, or heat.
- If a battery is faulty, its surface temperature may be high. Do not touch the battery to avoid scalds.
- Do not stand on, lean on, or sit on the top of the equipment.
- When battery packs are installed as spare parts, the following requirements must be met:
  - Before unpacking batteries, check whether the packaging is intact. Do not use batteries with damaged packaging. If any damage is found, notify the carrier and manufacturer immediately.

 Copyright © Huawei Digital Power Technologies Co., Ltd.

  - Install batteries within 24 hours after unpacking. If the batteries cannot be installed in time, put them in the original packaging and place them in a dry indoor environment without corrosive gases. Power on the ESS within 24 hours after installation. The process from unpacking batteries to powering on the system must be completed within 72 hours. During routine maintenance, ensure that the power-off time does not exceed 24 hours.
  - Before installing a battery pack, check that its enclosure is not deformed or damaged.
  - When installing batteries, do not place installation tools, metal parts, or sundries on the batteries. After the installation is complete, clean up the objects on the batteries and the surrounding area.
  - Do not install battery packs on rainy, snowy, or foggy days. Otherwise, the battery packs may be corroded by moisture or rain.
  - If batteries are exposed to water accidentally, do not install them. Instead, transport the batteries to a safe isolation point and contact technical engineers in a timely manner.
- In backup power scenarios, do not use the batteries for the following situations:
  - Medical devices substantially important to human life
  - Control equipment such as trains and elevators, as this may cause personal injury
  - Computer systems of social and public importance
  - Locations near medical devices
  - Other devices similar to those described above

Short-Circuit Protection

- When installing and maintaining batteries, wrap the exposed cable terminals on the batteries with insulation tape.
- Avoid foreign objects (such as conductive objects, screws, and liquids) from entering a battery, as this may cause short circuits.

Leakage Handling

NOTICE

Electrolyte leakage may damage the equipment. It will corrode metal parts and boards, and ultimately damage the boards.

Electrolyte is corrosive and can cause irritation and chemical burns. If you come into direct contact with the battery electrolyte, do as follows:

- Inhalation: Evacuate from contaminated areas, get fresh air immediately, and seek immediate medical attention.
- Eye contact: Immediately wash your eyes with water for at least 15 minutes, do not rub your eyes, and seek immediate medical attention.

- Skin contact: Wash the affected areas immediately with soap and water and seek immediate medical attention.
- Intake: Seek immediate medical attention.

Recycling

- Dispose of waste batteries in accordance with local laws and regulations. Do not dispose of batteries as household waste. Improper disposal of batteries may result in environmental pollution or an explosion.
- If a battery leaks or is damaged, contact technical support or a battery recycling company for disposal.
- If batteries are out of service life, contact a battery recycling company for disposal.
- Do not expose waste batteries to high temperatures or direct sunlight.
- Do not place waste batteries in environments with high humidity or corrosive substances.
- Do not use faulty batteries. Contact a battery recycling company to scrap them as soon as possible to avoid environmental pollution.

2 Overview

2.1 Model Description

This document involves the following product models:

- LUNA2000-241-2S1-DS
- LUNA2000-241-2S1
- LUNA2000-215-2S10
- LUNA2000-215-2S11
- LUNA2000-161-2S11
- LUNA2000-107-1S11

Figure 2-1 Model number (example)

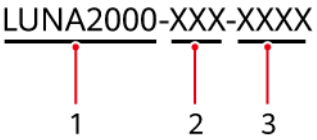

Table 2-1 Model number description

No.	Meaning	Description
1	Product family name	LUNA2000: Smart String ESS
2	Capacity level	• 241: nominal energy of 241 kWh • 215: nominal energy of 215 kWh • 161: nominal energy of 161 kWh • 107: nominal energy of 107 kWh

 Copyright © Huawei Digital Power Technologies Co., Ltd.

No.	Meaning	Description
3	ESS	• LUNA2000-241-2S1-DS: 0.45CP, with DCDC • LUNA2000-241-2S1: 0.45CP • LUNA2000-215-2S10: 0.5CP • LUNA2000-215-2S11: 0.5CP, with DCDC • LUNA2000-161-2S11: 0.67CP, with DCDC • LUNA2000-107-1S11: 1C, with DCDC

NOTICE

The following models manufactured in and before December 2024 do not support the on/off-grid switching function or the phase-level power limit control function.

- LUNA2000-215-2S10

Figure 2-2 Manufacturing date

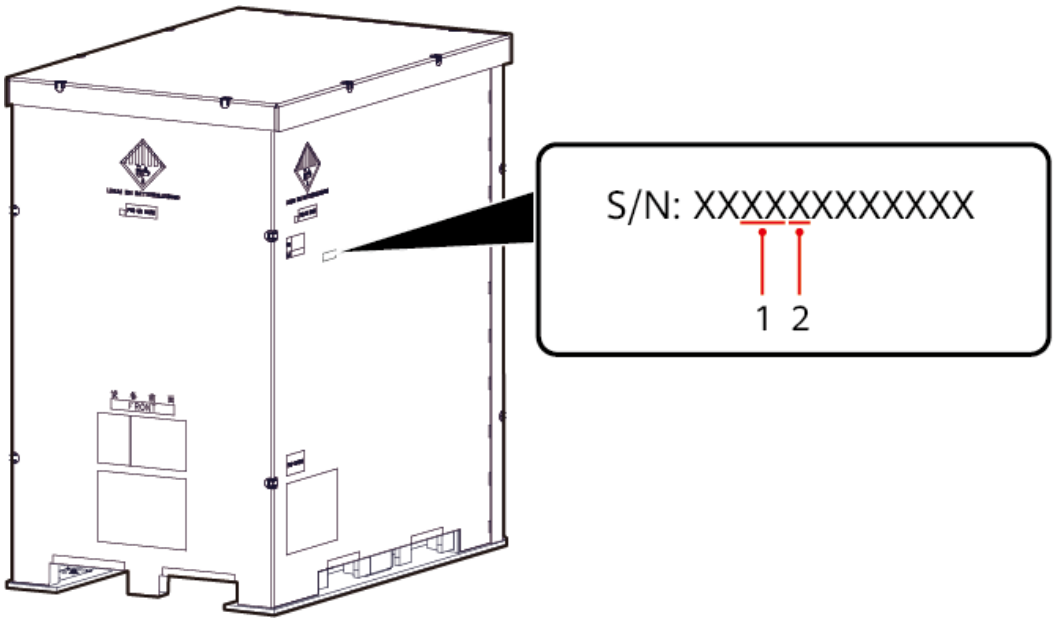

 Copyright © Huawei Digital Power Technologies Co., Ltd.

Table 2-2 Manufacturing date description

No.	Description	Remarks
1	Indicates the year by its last two digits. For example, the year 2024 is represented by 24.	• You can view the manufacturing date on the SN label on the packing case or ESS. • An SN consists of 12 digits. The third to fifth digits from left to right indicate the year and month.
2	Indicates the month by 1 to 9, A, B, and C from January to December.	

2.2 Label Description

NOTE

The symbols and signs are for reference only.

Table 2-3 Device labels

Symbol	Name	Meaning
	Proper disposal	Recycle batteries in accordance with local laws and regulations. Do not discard in general waste.
	Equipotential bonding	Indicates the position for equipotential bonding.
	CE marking	Indicates that the equipment has passed the CE certification, which is mandatory for entry into the EU market.
	Protective earthing	Indicates the position for connecting the PE cable.
	Rechargeable battery	Indicates that the equipment contains rechargeable batteries.

 Copyright © Huawei Digital Power Technologies Co., Ltd.

Symbol	Name	Meaning
	No open flames	No open flames are allowed.
	Toxic smoke warning	Toxic smoke will be released in a fire.
	Refer to instruction manual	Read the user manual before operating the product.
	High voltage hazard warning	High voltage hazard. Only authorized personnel are allowed to operate the equipment. Refer to the manual before opening the cover.
	Cable hole sealing	Cable holes shall be sealed with firestop putty.
	Exhaust fan warning	Do not touch the blades when the fan is rotating.
	Electric shock hazard warning	Electric shock hazard. Before powering off the device, disconnect all power supplies.
	High touch current warning	High touch current. Earthing connection is essential before power supply and/or telecommunication network connections.
	Fuse replacement warning	For continued protection against fire risk, replace only with a fuse of the same type and rating.

Symbol	Name	Meaning
	Capacitor discharge	Capacitors store hazardous energy. Do not open the cover until 5 minutes after disconnecting all power supplies.
	Equipment warning	1. Do not install, use, or operate outdoor equipment in harsh weather conditions such as lightning, rain, snow, sandstorm, and level 6 or stronger wind. 2. When the fire alarm horn/strobe flashes or buzzes: • Do not approach. • Do not open the door. • Stay away immediately. • Cut off the power supply remotely only when your safety is guaranteed. 3. If the equipment catches fire or emits smoke, call the fire emergency service in addition to the preceding operations.

Table 2-4 Battery labels

Symbol	Name	Meaning
	High voltage hazard	Hazardous voltage exists after the equipment is powered on. Take protective measures during operation and maintenance (O&M).
	High temperature hazard	Do not touch the equipment, as the enclosure is hot when the equipment is running.
	Battery	Replacing with a battery of an incorrect model may cause an explosion. Dispose of used batteries according to the instructions.

Symbol	Name	Meaning
	Corrosive substance	Take care when handling corrosive substances.
	ESD susceptibility	Electrostatic sensitive device (ESD)
	Equipotential bonding	Indicates the position for equipotential bonding.
	Keep dry	Protect from rain.
	Keep dry	Keep dry: The package shall be kept away from rain.
	Do not spray with water	Water spraying is prohibited.
	No open flame	Open flame and smoking are prohibited.
	No stepping on surface	Do not step on surface.
	Refer to instruction manual	Reminds operators to refer to the documentation provided with the equipment. Losses caused by operations that do not comply with the requirements of site selection, storage, or installation specified in the user manual are not covered under the warranty.
	Fall prevention	To prevent a component from falling, hold the component bottom before removal.

 Copyright © Huawei Digital Power Technologies Co., Ltd.

Symbol	Name	Meaning
	Proper disposal	Recycle batteries in accordance with local laws and regulations. Do not discard in general waste.
	CE marking	Indicates that the equipment has passed the CE certification, which is mandatory for entry into the EU market.
	Lifting	The equipment is heavy and must be handled using tools such as a forklift.

2.3 Product Description

Introduction

The ESS mainly consists of lithium battery packs (PACK), Power Converter System (PCS), DC-DC Converter (DCDC) (optional), Rack Control Module (RCM), Liquid Thermal Management System (LTMS), and thermal runaway suppression system. It stores and releases electricity through the control of the RCM.

- Battery charging: Controlled by the RCM, the electricity from the mains or other power supplies is converted by the DCDC (optional) and PCS into DC electricity, which is then stored in batteries.
- Battery discharging: Controlled by the RCM, the electricity released by batteries is converted by the DCDC (optional) and PCS into AC electricity, which is then supplied to loads.

Highlights

- Integrated design: The internal components of the ESS are integrated to reduce the footprint, simplify the installation and O&M process, and greatly reduce the installation time and cost.
- Smart thermal management with air and liquid cooling: The ESS uses thermal management and control technologies to implement various functions including active liquid cooling, natural air cooling, waste heat recovery, low-temperature heat pump heating or electric heater, and intelligent dehumidification, achieving optimal energy efficiency throughout the year.

 Copyright © Huawei Digital Power Technologies Co., Ltd.

2.4 Appearance

Figure 2-3 Appearance and dimensions

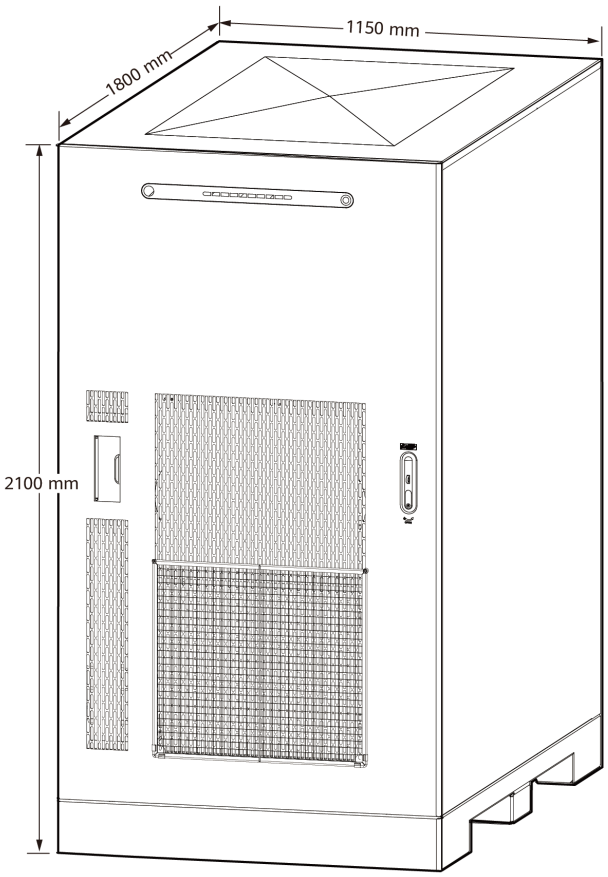

2.5 Components

NOTICE

The ESS has multiple models. The figures in this document are for reference only.

 Copyright © Huawei Digital Power Technologies Co., Ltd.

Figure 2-4 Components (door closed)

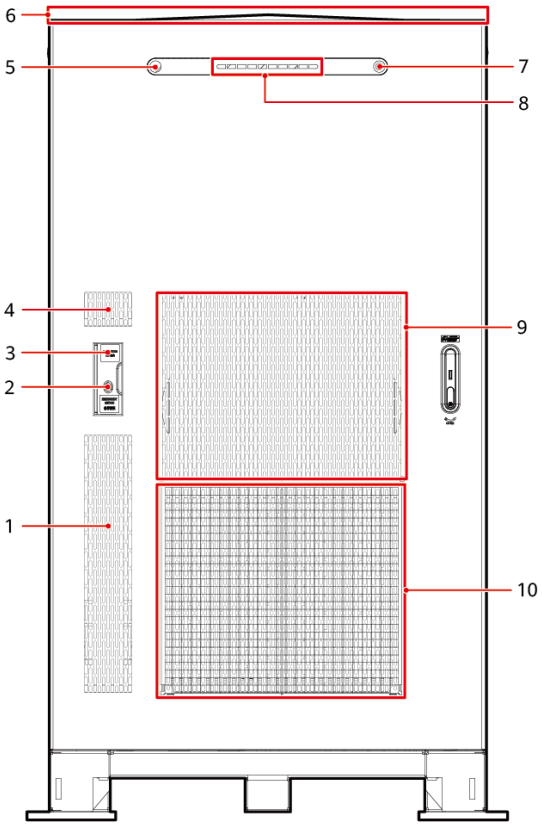

Table 2-5 Component description

No.	Item	Description
1	Air inlet of the air duct	Air inlet of the air duct for the exhaust fan
2	Emergency stop switch	Stops the ESS in emergency situations.
3	WiFi button	Press and hold the WiFi button for 1–6 seconds to activate the WiFi communication of the Battery Control Unit (BCU) and the WiFi communication of the SmartLogger connected to the ESS. **NOTE** After the WiFi is activated, if no connection is established for more than 4 hours, the WiFi is automatically disabled.
4	Air outlet of the air duct	Air outlet of the air duct for the exhaust fan
5	Fire alarm indicator	Generates alarms for internal devices when abnormal temperature or smoke occurs.

 Copyright © Huawei Digital Power Technologies Co., Ltd.

No.	Item	Description
6	Explosion relief panel	If an explosion occurs inside the cabinet, the explosion relief panel is automatically open to relieve the pressure inside the cabinet and reduce the concentration of gases inside the cabinet.
7	Status indicator	Indicates the overall ESS status: ● Steady green: The ESS is running properly or connected to the grid with zero feed-in power. ● Blinking green fast (on for 0.5s and off for 0.5s): The device is being upgraded. ● Blinking green slowly (on for 1s and off for 1s): The app is connected to the ESS. ● Pulsating green (gradually changing brightness, on for 2s and off for 2s): The ESS is in standby mode. ● Off: The ESS is shut down. ● Blinking red fast (on for 0.5s and off for 0.5s): A minor alarm is generated, or the communication between the indicator board and the BCU is interrupted. ● Steady red: A major alarm is generated. Contact technical support.
8	SOC indicator	Consists of 10 rectangular LEDs that display the SOC status of the ESS in real time through the number of sequential blinking LEDs. For example: ● When the ESS is charging from 60% to 70% SOC, the first to sixth LEDs are steady green, and the seventh to tenth indicators are blinking in sequence. When the ESS is fully charged, 10 LEDs are all steady on. ● When the ESS is discharging from 70% to 60% SOC, the first to sixth LEDs are steady green, the seventh LED is blinking slowly, and the eighth to tenth LEDs are off. When the ESS is fully discharged, 10 LEDs are all off. ● When the ESS is not charged or discharged, for example at 70% SOC, the first to seventh indicators are steady green, and the eighth to tenth indicators are off.
9	Air outlet of the heat sink	Air outlet of the LTMS heat sink.
10	Air inlet of the heat sink	Air inlet of the LTMS heat sink, covered with an air filter

Figure 2-5 Components (interior view, with DCDC)

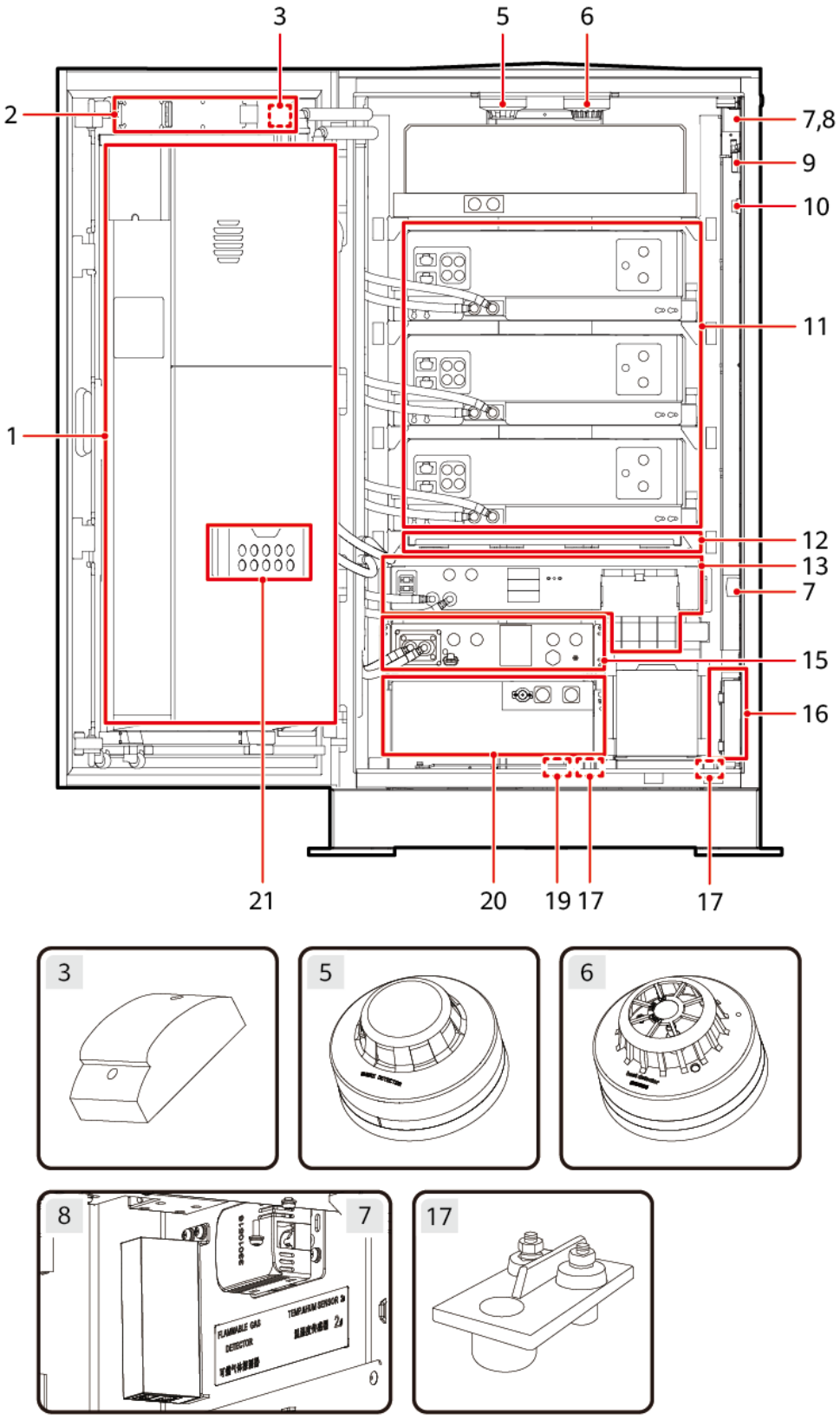

Table 2-6 Component description

No.	Item	Maximum Quantity per ESS	Description
1	LTMS	1	The Liquid Cooling Controller (LCC) controls the temperature in the ESS with the cooling, heating, and dehumidification functions.
2	Display module	1	Provides an independent fire alarm indicator, SOC indicator, and status indicator for the ESS.
3	Fire alarm horn/strobe	1	Generates alarms for internal devices when abnormal temperature or smoke occurs.
5	Smoke detector	1	Photoelectric smoke detector that detects smoke.
6	Heat detector	1	Monitors temperature to prevent fire.
7	T/H sensor	2	Measures the real-time ambient temperature and humidity in the cabinet.
8	CO sensor	1	Checks the concentration of CO in combustible gases.
9	Door status sensor	1	Monitors the opening or closing status of the ESS door.
10	Door limit switch	1	Works with the door status sensor to monitor the opening or closing status of the ESS door.
11	PACK	2/3/4	A battery pack is a combination of battery cells that are connected in series and supply or receive power through a pair of positive and negative terminals. Each battery pack is equipped with a battery management module, balancing DCDC module, and liquid cooling plate.
12	Aerosol fire suppression device	3	When the aerosol fire suppression device senses the high temperature, it automatically starts and releases extinguishant.
13	PCS	1	The PCS converts the battery DC voltage discharged from the ESS into specified AC voltage and converts AC voltage into DC voltage to charge the ESS. It supports 100% unbalanced loads.

No.	Item	Maximum Quantity per ESS	Description
15	DCDC	1	DC-DC converter that converts the DC voltage of a battery rack into stable DC voltage. Only some models support this function.
16	SmartLogger installation position	-	The SmartLogger can be installed inside the ESS in the single-cabinet scenario. The SmartLogger manages the voltage, current, temperature, and energy of each ESS in an array.
17	Water sensor	2	Detects water based on the resistance change between both electrodes.
19	Desiccant	4	Desiccants are used for dehumidification inside the ESS. **NOTE** Do not remove the desiccants before the ESS is powered on.
20	RCM	1	The RCM consists of the BCU, rack power control board, fuse, contactor,, etc. It is used for ESS control, short-circuit fault detection, insulation detection, leakage current detection, high-precision current sampling, auxiliary power supply, and connecting to the ESS on the mobile app.
21	Document holder	1	Stores documents related to the ESS, such as the quick guide.

2.5.1 Power Supply and Distribution System

2.5.1.1 Power Supply and Distribution System Overview

NOTE

The components of the power supply and distribution system may vary. The figures in this document are for reference only.

Figure 2-6 Position of the power supply and distribution system

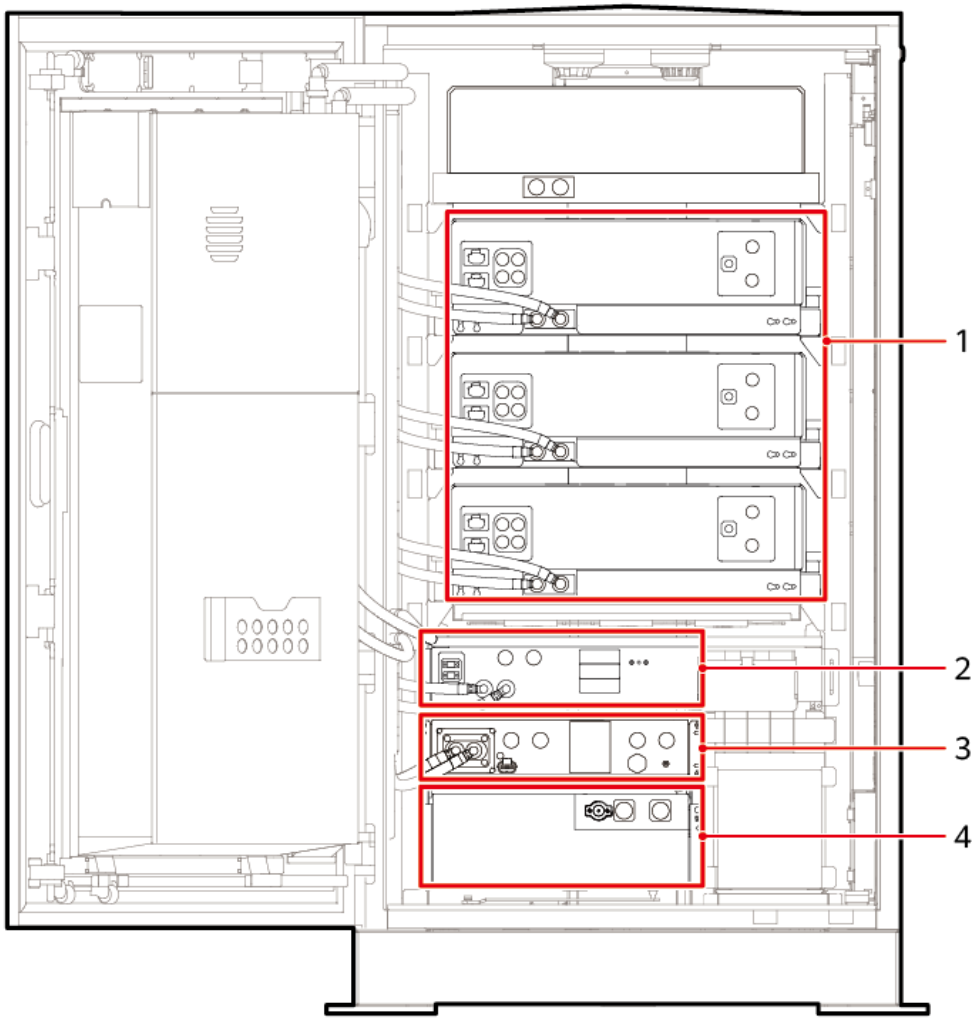

(1) PACK
(2) PCS
(3) DCDC (supported only by some models)
(4) RCM

2.5.1.2 PACK

The ESS supports the following types of PACKs:

- LUNA2000-60-2E1
- LUNA2000-54-2E1
- LUNA2000-54-1E1

 Copyright © Huawei Digital Power Technologies Co., Ltd.

Figure 2-7 PACK appearance

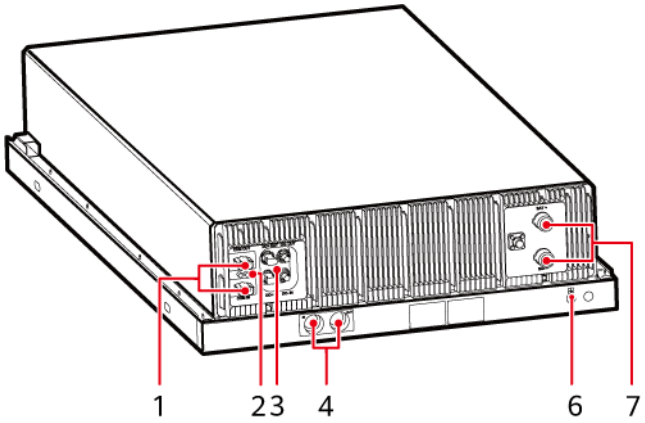

Table 2-7 PACK panel description

No.	Port	Description
1	Communications ports (COM OUT and COM IN)	Used for communication between PACKs or between PACKs and the RCM.
2	Signal cable ground terminal	Used to ground the PACK signal cable shield layer.
3	Balancing module ports (DC+ OUT, DC– OUT, DC + IN, and DC– IN)	Input and output ports of the balancing DCDC module.
4	Coolant inlet and outlet ports (IN and OUT)	Used for coolant supply and return.
6	Ground terminal	Used to ground the PACK.
7	General power ports (BAT+ and BAT–)	PACK general power input/output port, used for power connection between PACKs or between PACKs and the RCM.

Table 2-8 ESS battery configuration

ESS Model	Battery Type	Battery Quantity
LUNA2000-241-2S1-DS	LUNA2000-60-2E1	4
LUNA2000-241-2S1	LUNA2000-60-2E1	4
LUNA2000-215-2S10	LUNA2000-54-2E1	4
LUNA2000-215-2S11	LUNA2000-54-2E1	4
LUNA2000-161-2S11	LUNA2000-54-1E1	3
LUNA2000-107-1S11	LUNA2000-54-1E1	2

 Copyright © Huawei Digital Power Technologies Co., Ltd.

Table 2-9 Technical specifications

Item	LUNA2000-60-2E1	LUNA2000-54-2E1	LUNA2000-54-1E1
Cell capacity	3.2 V/314 Ah	3.2 V/280 Ah	3.2 V/280 Ah
Cell material	Lithium iron phosphate	Lithium iron phosphate	Lithium iron phosphate
Battery configuration	1P60S	1P60S	1P60S
Operating voltage	162–213 V	162–216 V	162–216 V
Rated voltage	192 V	192 V	192 V
Charge and discharge rate	< 0.45CP	≤ 0.5CP	≤ 1C
Nominal capacity	60.288 kWh	53.76 kWh	53.76 kWh
Weight	≤ 412 kg (excluding coolant)	≤ 402 kg (excluding coolant)	≤ 402 kg (excluding coolant)
Dimensions (W x H x D)	810 mm x 245 mm x 1333 mm	810 mm x 245 mm x 1333 mm	810 mm x 245 mm x 1333 mm
Cooling mode	Liquid cooling	Liquid cooling	Liquid cooling
Ingress protection (IP) rating	IP65	IP65	IP65
Storage temperature	–35°C to +60°C	–35°C to +60°C	–35°C to +60°C
Transportation temperature	–35°C to +60°C	–35°C to +60°C	–35°C to +60°C
Balancing mode	Passive cell balancing Active PACK balancing	Passive cell balancing Active PACK balancing	Passive cell balancing Active PACK balancing
Communications port	CAN FD/Daisy chain	CAN FD/Daisy chain	CAN FD/Daisy chain

 Copyright © Huawei Digital Power Technologies Co., Ltd.

2.5.1.3 PCS

Figure 2-8 PCS appearance

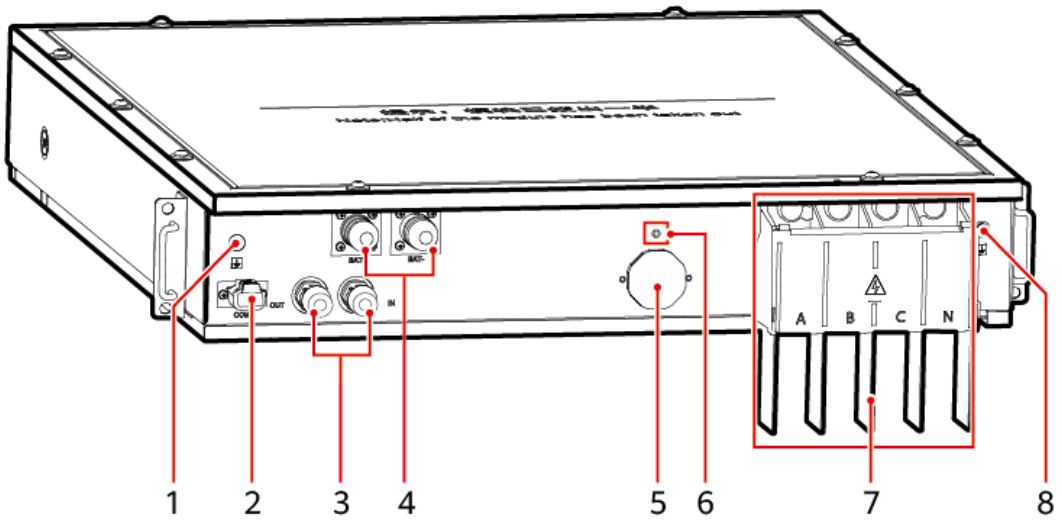

Table 2-10 PCS panel description

No.	Port	Description
1	Signal cable ground terminal	Used to ground the PCS signal cable shield layer.
2	Communications port (COM)	Used for communication between the PCS and the RCM.
3	Coolant inlet and outlet ports (IN and OUT)	Used for coolant circulation.
4	DC power terminals (BAT+ and BAT–)	Used for DC input and output.
5	Exhaust valve	Used for air exhaust and pressure relief.
6	LED indicator	Green (running normally) Yellow (software initializing) Red (normal PCS power supply, waiting for the ESS to start)
7	AC input/output power terminals	Used for AC input and output.
8	Ground terminal	Used to ground the PCS.

 Copyright © Huawei Digital Power Technologies Co., Ltd.

Technical Specifications

Table 2-11 Technical specifications

Item	PCS2000-108K-MB1	PCS2000-99K-MB1	PCS2000-60K-MB1	PCS2000-50K-MB1
Maximum DC voltage	1100 V DC	1100 V DC	1100 V DC	1100 V DC
Operating DC voltage range	550–950 V DC	550–950 V DC	550–950 V DC	550–950 V DC
Maximum DC current	217.1 A	196.3 A	120.0 A	100.0 A
Rated operating AC voltage	380/400/415 V AC 420/440/480 V AC	380/400/415 V AC 420/440/480 V AC	380/400/415 V AC 420/440/480 V AC	380/400/415 V AC 420/440/480 V AC
Rated operating AC frequency	50/60 Hz	50/60 Hz	50/60 Hz	50/60 Hz
Rated operating AC current	164.1 A @ 380 V 155.9 A @ 400 V 150.3 A @ 415 V 148.5 A @ 420 V 141.8 A @ 440 V 130.0 A @ 480 V	150.5 A @ 380 V 142.9 A @ 400 V 137.8 A @ 415 V 136.1 A @ 420 V 130.0 A @ 440 V 119.1 A @ 480 V	91.2 A @ 380 V 86.7 A @ 400 V 83.5 A @ 415 V 82.5 A @ 420 V 78.8 A @ 440 V 72.2 A @ 480 V	76.0 A @ 380 V 72.2 A @ 400 V 69.6 A @ 415 V 68.8 A @ 420 V 65.7 A @ 440 V 60.2 A @ 480 V

 Copyright © Huawei Digital Power Technologies Co., Ltd.

Item	PCS2000-108K-MB1	PCS2000-99K-MB1	PCS2000-60K-MB1	PCS2000-50K-MB1
Maximum operating AC current[1]	180.5 A @ 380 V AC 171.5 A @ 400 V AC 165.3 A @ 415 V AC 163.4 A @ 420 V AC 155.9 A @ 440 V AC 142.9 A @ 480 V AC 197.0 A @ 380 V AC (1 min) 187.1 A @ 400 V AC (1 min) 180.4 A @ 415 V AC (1 min) 178.2 A @ 420 V AC (1 min) 170.1 A @ 440 V AC (1 min) 155.9 A @ 480 V AC (1 min) 213.4 A @ 380 V AC (10s) 202.7 A @ 400 V AC (10s) 195.4 A @ 415 V AC (10s) 193.0 A @ 420 V AC (10s)	165.5 A @ 380 V AC 157.2 A @ 400 V AC 151.6 A @ 415 V AC 149.7 A @ 420 V AC 142.9 A @ 440 V AC 131.0 A @ 480 V AC 180.5 A @ 380 V AC (1 min) 171.5 A @ 400 V AC (1 min) 165.3 A @ 415 V AC (1 min) 163.4 A @ 420 V AC (1 min) 155.9 A @ 440 V AC (1 min) 142.9 A @ 480 V AC (1 min) 195.6 A @ 380 V AC (10s) 185.8 A @ 400 V AC (10s) 179.1 A @ 415 V AC (10s) 177.0 A @ 420 V AC (10s) 168.9 A @ 440 V AC (10s)	100.3 A @ 380 V AC 95.3 A @ 400 V AC 91.9 A @ 415 V AC 90.8 A @ 420 V AC 86.7 A @ 440 V AC 79.4 A @ 480 V AC 109.4 A @ 380 V AC (1 min) 104.0 A @ 400 V AC (1 min) 100.2 A @ 415 V AC (1 min) 99.0 A @ 420 V AC (1 min) 94.5 A @ 440 V AC (1 min) 86.7 A @ 480 V AC (1 min) 118.6 A @ 380 V AC (10s) 112.6 A @ 400 V AC (10s) 108.6 A @ 415 V AC (10s) 107.3 A @ 420 V AC (10s) 102.4 A @ 440 V AC (10s) 93.9 A @ 480 V AC (10s)	83.6 A @ 380 V AC 79.4 A @ 400 V AC 76.6 A @ 415 V AC 75.7 A @ 420 V AC 72.2 A @ 440 V AC 66.2 A @ 480 V AC 91.2 A @ 380 V AC (1 min) 86.7 A @ 400 V AC (1 min) 83.5 A @ 415 V AC (1 min) 82.5 A @ 420 V AC (1 min) 78.8 A @ 440 V AC (1 min) 72.2 A @ 480 V AC (1 min) 98.8 A @ 380 V AC (10s) 93.9 A @ 400 V AC (10s) 90.5 A @ 415 V AC (10s) 89.4 A @ 420 V AC (10s) 85.3 A @ 440 V AC (10s) 78.2 A @ 480 V AC (10s)

Item	PCS2000-108K-MB1	PCS2000-99K-MB1	PCS2000-60K-MB1	PCS2000-50K-MB1
	184.3 A @ 440 V AC (10s) 168.9 A @ 480 V AC (10s)	154.9 A @ 480 V AC (10s)		
Rated AC power	108 kW	99 kW	60 kW	50 kW
Power factor	1 leading to 1 lagging	1 leading to 1 lagging	1 leading to 1 lagging	1 leading to 1 lagging
Operating temperature range	–25°C to +65°C (The PCS works with the ESS at –30°C to +55°C.)	–25°C to +65°C (The PCS works with the ESS at –30°C to +55°C.)	–25°C to +65°C (The PCS works with the ESS at –30°C to +55°C.)	–25°C to +65°C (The PCS works with the ESS at –30°C to +55°C.)
Voltage detection precision	1%	1%	1%	1%
Frequency detection precision	1‰	1‰	1‰	1‰
Protection class	Class I	Class I	Class I	Class I
Maximum AC power [1]	118.8 kW (long-term operation) 129.6 kW (1 min) 140.4 kW (10s)	108.9 kW (long-term operation) 118.8 kW (1 min) 128.7 kW (10s)	66 kW (long-term operation) 72 kW (1 min) 78 kW (10s)	55 kW (long-term operation) 60 kW (1 min) 65 kW (10s)
Note: [1] For the maximum operating AC current and maximum power, 10s refers to 1.3 times overload discharge, and 5s refers to charge.				

Table 2-12 Protection

Item	PCS2000-108K-MB1	PCS2000-99K-MB1	PCS2000-60K-MB1	PCS2000-50K-MB1
Overvoltage category	II(DC)/III(AC)	II(DC)/III(AC)	II(DC)/III(AC)	II(DC)/III(AC)
AC surge protection	Type II, 5 kA (8/20 μs)	Type II, 5 kA (8/20 μs)	Type II, 5 kA (8/20 μs)	Type II, 5 kA (8/20 μs)
Insulation resistance detection	Supported	Supported	Supported	Supported
Anti-islanding protection	Supported	Supported	Supported	Supported
Output overcurrent protection	Supported	Supported	Supported	Supported
Residual current monitoring	Supported	Supported	Supported	Supported
Input reverse connection protection	Supported	Supported	Supported	Supported

Table 2-13 General specifications

Item	PCS2000-108K-MB1	PCS2000-99K-MB1	PCS2000-60K-MB1	PCS2000-50K-MB1
Dimensions (W x H x D)	≤ 820 mm x 160 mm x 973 mm (excluding mounting ears and terminals)	≤ 820 mm x 160 mm x 973 mm (excluding mounting ears and terminals)	≤ 820 mm x 160 mm x 973 mm (excluding mounting ears and terminals)	≤ 820 mm x 160 mm x 973 mm (excluding mounting ears and terminals)
Weight	≤ 105 kg (excluding coolant)	≤ 105 kg (excluding coolant)	≤ 105 kg (excluding coolant)	≤ 105 kg (excluding coolant)
IP rating	IP55	IP55	IP55	IP55
Cooling mode	Smart liquid cooling	Smart liquid cooling	Smart liquid cooling	Smart liquid cooling

Item	PCS2000-108K-MB1	PCS2000-99K-MB1	PCS2000-60K-MB1	PCS2000-50K-MB1
PCS electromagnetic compatibility (EMC) warning: This PCS is not intended for independent use in a residential environment, and this PCS may cause radio interference, in which case the user may be required to take additional mitigation measures against electromagnetic interference. When the PCS is installed in this Smart String ESS, this restriction does not apply.				

2.5.1.4 DCDC

NOTE

Only some models are equipped with the DCDC.

Figure 2-9 DCDC appearance

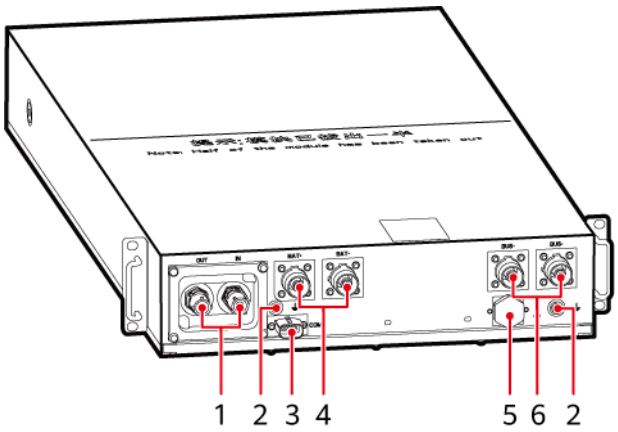

Table 2-14 DCDC panel description

No.	Port	Description
1	Coolant inlet and outlet ports (IN and OUT)	Used for coolant circulation.
2	Ground terminal	Used to ground the DCDC. The ground terminal on the left is connected to the shield layer outside the signal cable, and the ground terminal on the right is connected to the ground bar of the ESS.
3	Integrated signal port (COM)	Integrates the CAN communications ports and fast I/O signal ports.
4	Battery rack DC ports (BAT+ and BAT–)	Positive and negative battery terminals.
5	Exhaust valve	Used for air exhaust and pressure relief in the DCDC.

 Copyright © Huawei Digital Power Technologies Co., Ltd.

No.	Port	Description
6	DC bus terminals (BUS + and BUS–)	Positive and negative terminals of the DC bus.

Table 2-15 ESS DCDC configuration

ESS Model	DCDC Type	DCDC Quantity
LUNA2000-241-2S1-DS	LUNA2000B-110U-LM51	1
LUNA2000-241-2S1	N/A	0
LUNA2000-215-2S10	N/A	0
LUNA2000-215-2S11	LUNA2000B-110U-LM51	1
LUNA2000-161-2S11	LUNA2000B-110U-LM51	1
LUNA2000-107-1S11	LUNA2000B-110U-LM51	1

Technical Specifications

Table 2-16 Efficiency

Item	LUNA2000B-110U-LM51
Maximum efficiency	98.9% @ 110 kW version

Table 2-17 Battery side specifications

Item	LUNA2000B-110U-LM51
Number of battery racks	1
Operating voltage range	324–864 V @ lithium iron phosphate
Voltage range for 110 kW power	395–864 V
Maximum operating current	280 A

Table 2-18 Bus side specifications

Item	LUNA2000B-110U-LM51
Number of battery racks connected to the bus	1

Item	LUNA2000B-110U-LM51
Maximum DC voltage	1100 V
Operating voltage range	550–950 V

Table 2-19 Protection

Item	LUNA2000B-110U-LM51
Reverse connection protection	Supported
Overtemperature protection	Supported
Overcurrent protection on the battery side	Supported
Short circuit protection on the battery side	Supported
Short circuit protection on the bus side	Supported

Table 2-20 General specifications

Item	LUNA2000B-110U-LM51
IP rating	IP54
Dimensions (W x H x D)	538 mm x 135 mm x 1080 mm
Weight	≤ 65 kg (excluding coolant)
Storage temperature	Storage temperature with the ESS (with antifreeze): –35°C to +60°C Separate storage temperature (without antifreeze): –40°C to +70°C
Storage humidity	5%–95% RH
Cooling mode	Smart liquid cooling
Communications port	CAN
Environmental protection requirement	RoHS 6

2.5.1.5 RCM

The ESS supports the following RCMs:

- RCM-M1-R-140-21 (0.5CP)
- RCM-M3-R-280-21 (1C)

Figure 2-10 RCM appearance

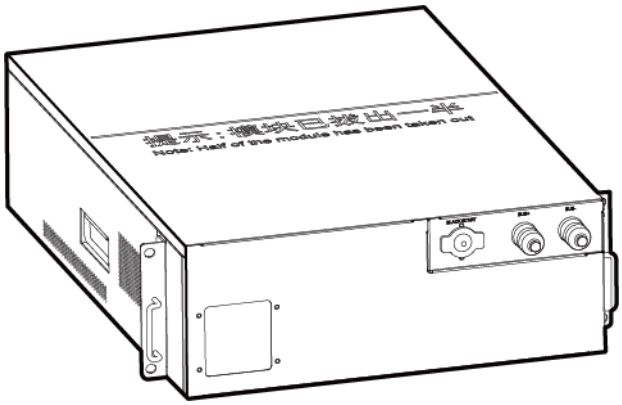

Figure 2-11 RCM panel

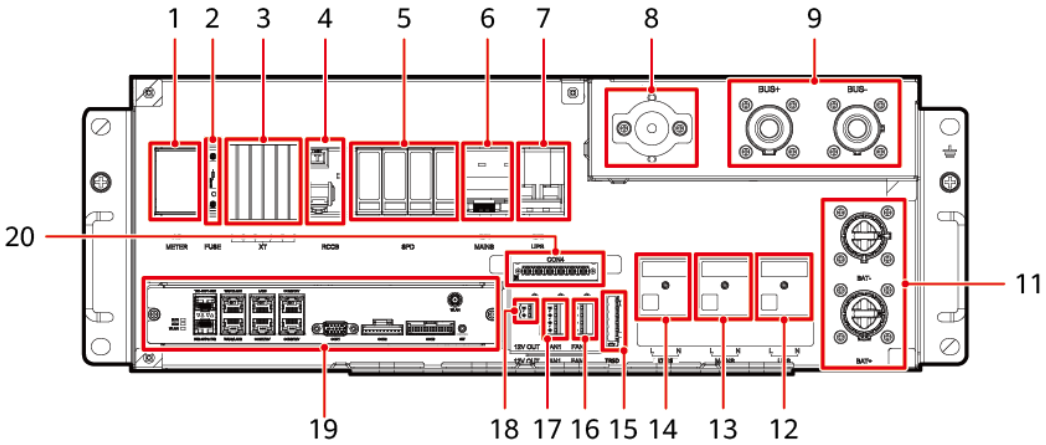

Table 2-21 Component configuration

No.	Item	Description
1	Power meter (AC METER)	Collects information about the auxiliary AC power supply.
2	Power meter fuse (FUSE)	Fuse of the power meter.
3	Wiring terminals for manually switching the auxiliary power supply (UT6)	Used to manually switch between the UPS and mains. Terminals 1–3 are connected to live wire bars. Terminals 4–6 are connected to neutral wire bars.
4	Residual current circuit breaker (RCCB)	Used for residual current protection.

 Copyright © Huawei Digital Power Technologies Co., Ltd.

No.	Item	Description
5	AC surge protective device (SPD)	Provides surge protection for mains AC power.
6	General AC switch (QF1)	General mains AC input switch.
7	UPS switch (QF2)	General UPS AC input switch.
8	Black start button (BLACK START)	Triggers the ESS black start.
9	DC bus terminals (BUS + and BUS–)	Positive and negative terminals of the DC bus.
11	Battery rack DC ports (BAT+ and BAT–)	BAT+ and BAT– refer to the positive and negative terminals, respectively.
12	UPS (L, N) AC input wiring terminals	Wiring terminals of the UPS AC input.
13	MAINS (L, N) AC input wiring terminals	Wiring terminals of the mains AC input.
14	LTMS AC output wiring terminal (LTMS)	Used to supply mains power to the LTMS.
15	Wiring terminal (TRSD)	Integrated wiring terminal, used for the following components from top to bottom: 1–6 5–6 are used to supply power to the SmartLogger.
16	Output wiring terminal of the ESS exhaust fan (FAN2)	Used for power supply and communication of the ESS exhaust fan under the cabinet door.
17	Output wiring terminal of the ESS exhaust fan (FAN1)	Used for power supply and communication of the ESS exhaust fan above the cabinet door.
18	12 V DC output wiring terminal (12V OUT)	12 V DC auxiliary power supply.
19	BCU	Aggregates interfaces, converts protocols, collects and stores data, and performs unified monitoring and local maintenance for devices in the ESS.
20	Wiring terminal (CON4)	Integrated wiring terminal, used for communication between components.

Table 2-22 RCM configuration

ESS Model	RCM Type
LUNA2000-241-2S1-DS	RCM-M1-R-140-21 (0.5CP, without disconnector)
LUNA2000-241-2S1	RCM-M1-R-140-21 (0.5CP)
LUNA2000-215-2S10	RCM-M1-R-140-21 (0.5CP)
LUNA2000-215-2S11	RCM-M1-R-140-21 (0.5CP)
LUNA2000-161-2S11	RCM-M3-R-280-21 (1C)
LUNA2000-107-1S11	RCM-M3-R-280-21 (1C)

Technical Specifications

Table 2-23 RCM technical specifications

Item	RCM
AC voltage	120–300 V AC
BUS voltage	280–1100 V DC
BAT voltage	280–1100 V DC
Operating temperature	–30°C to +55°C
Storage temperature	–35°C to +60°C
Dimensions (W x H x D)	538 mm x 200 mm x 750 mm
Weight	≤ 40 kg
IP rating	IP20

2.5.2 Monitoring System

2.5.2.1 Monitoring System Overview

The LCC, BMU, and BCU monitor the ESS internal status, and the SmartLogger monitors the ESS external environment.

Figure 2-12 Positions of monitoring system components

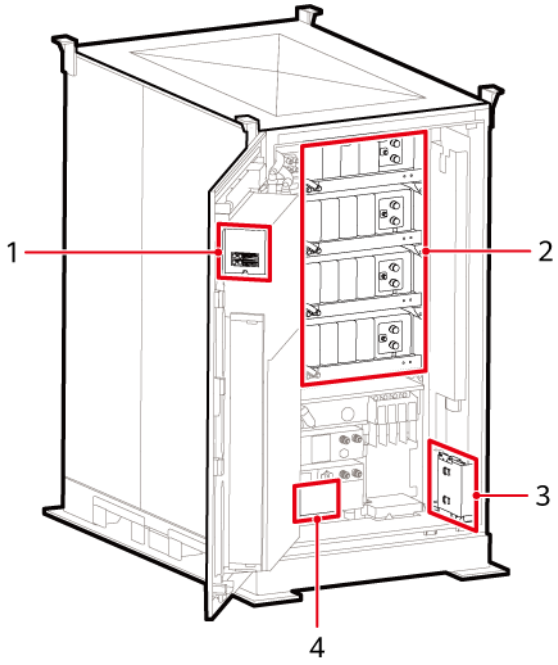

Table 2-24 Component description

No.	Item	Description
1	LCC	Manages the working mode of the LTMS and adjusts the supply coolant temperature.
2	Battery Monitoring Unit (BMU)	Manages the voltage, current, temperature, and energy of each cell in a PACK.
3	SmartLogger (external monitoring)	• Manages the voltage, current, temperature, and energy of each ESS in an array. • It can be installed inside the cabinet in the single-cabinet on-grid scenario. • It must be installed outside the cabinet in the multi-cabinet or microgrid scenario.
4	BCU	• Manages the voltage, current, temperature, and energy of each PACK in a battery rack. • Used for ESS monitoring. Aggregates interfaces, converts protocols, collects and stores data, and performs unified monitoring and local maintenance for devices in the ESS.

 Copyright © Huawei Digital Power Technologies Co., Ltd.

2.5.2.2 BCU

Appearance

Figure 2-13 BCU appearance

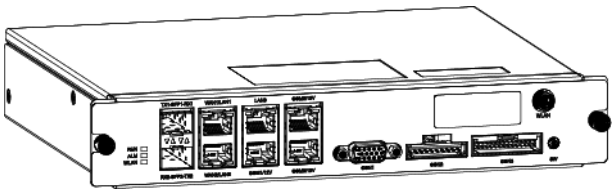

Figure 2-14 BCU panel description

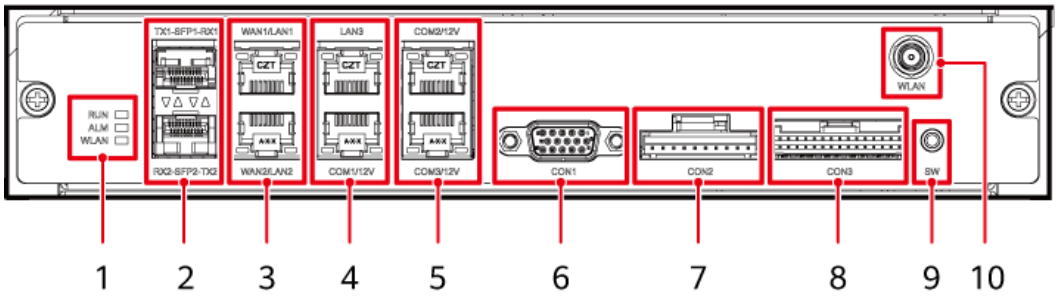

(1) LED indicators	(2) Optical fiber communications ports	(3) FE communications ports
(4) COM and LAN communications ports	(5) COM communications ports	(6) CON communications port 1
(7) CON communications port 2	(8) CON communications port 3	(9) SW (RST button)
(10) WLAN antenna port	-	-

 Copyright © Huawei Digital Power Technologies Co., Ltd.

Indicators

Table 2-25 Indicator description

Indicator	Status	Description
Running indicator (RUN)	Off	Not powered on
	Blinking green slowly (on for 1s and then off for 1s)	The communication with the upper-layer controller is normal.
	Blinking green fast (on for 0.125s and then off for 0.125s)	The communication with the upper-layer controller is interrupted.
Alarm indicator (ALM)	Off	No system alarm is generated.
	Blinking red slowly (on for 1s and then off for 4s)	The system raises a warning alarm.
	Blinking red fast (on for 0.5s and then off for 0.5s)	The system raises a minor alarm.
	Steady red	The system raises a major alarm.
Wireless status indicator (WLAN)	Off	The WLAN module does not work.
	Steady green	The WLAN switch is turned on.

2.5.3 Environment Control System

2.5.3.1 Environment Control System Overview

Figure 2-15 Position of the environment control system

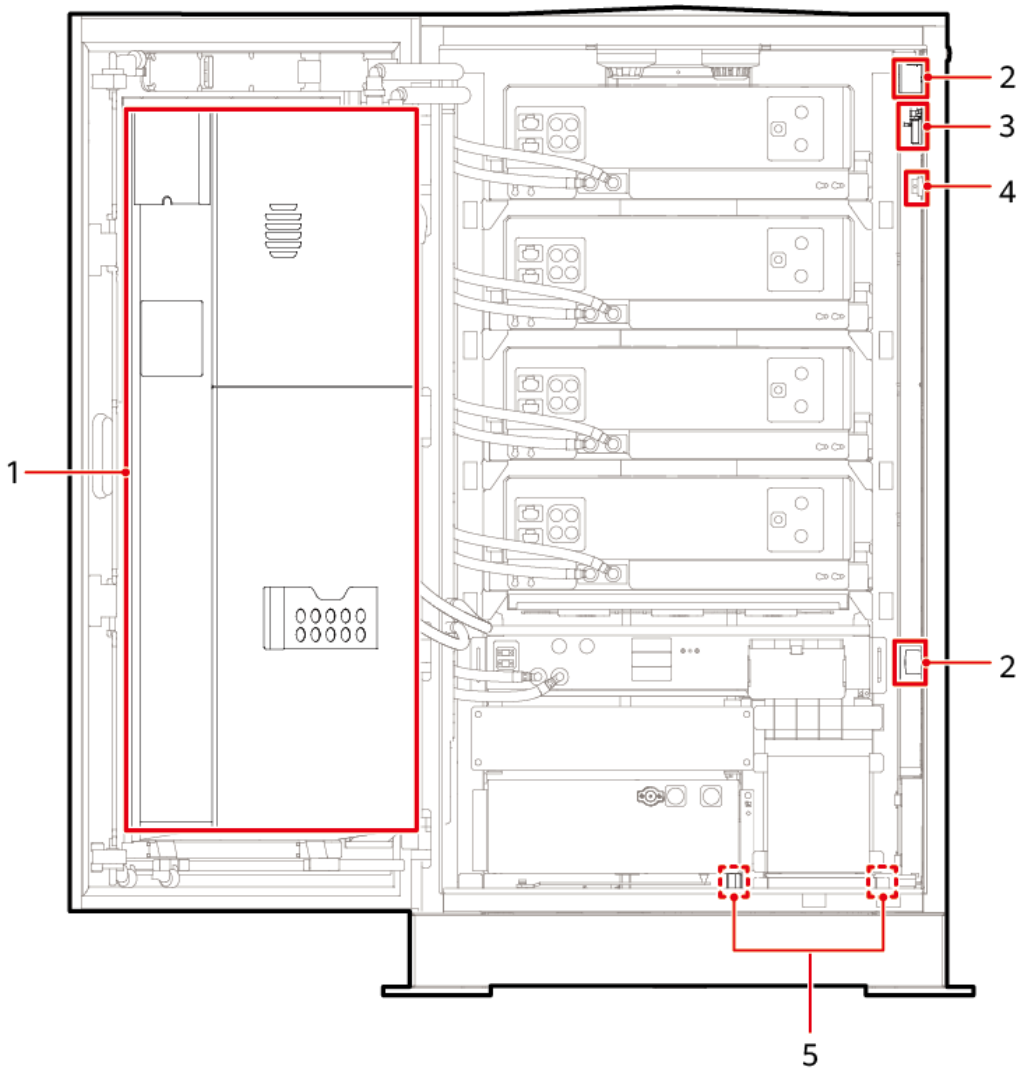

(1) LTMS	(2) T/H sensor	(3) Door status sensor
(4) Travel switch	(5) Water sensor	-

2.5.3.2 LTMS

The LTMS consists of the compressor, fan, pump, heat exchanger, and multi-way valve, and supports intelligent selection of cooling and heating modes.

- Mechanical cooling mode: In a high-temperature environment, the coolant is supplied through the multi-way valve to cool the PCS and DCDC, and the compressor is used for cooling the coolant which is supplied to cool the PACK.

 Copyright © Huawei Digital Power Technologies Co., Ltd.

- Natural cooling mode: In a low-temperature environment, the fan is used for cooling the coolant which is supplied through the multi-way valve to cool the PACK, DCDC, and PCS.
- Heating mode: When the PACK temperature is too low, the LTMS automatically adjusts the multi-way valve based on the ambient temperature to implement three heating modes: heat pump, waste heat recovery, and electric heater.

The equipment contains fluorinated greenhouse gases.

Figure 2-16 LTMS appearance

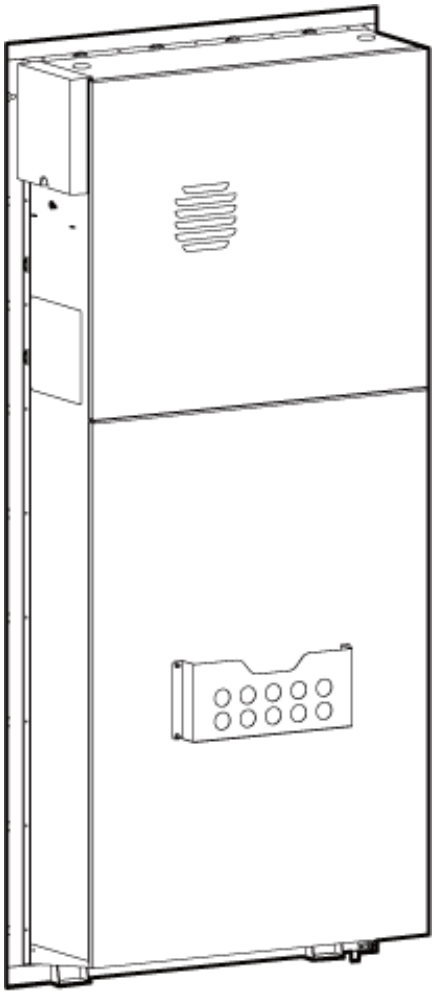

Technical Specifications	LunaTMS2000-H008SG00	LunaTMS2000-H008SG10	LunaTMS2000-H008SG20	LunaTMS2000-H008SG30
Power system	200–240 V AC, 1 PH	200–240 V AC, 1 PH	200–240 V AC, 1 PH	200–240 V AC, 1 PH
Frequency	50/60 Hz	50/60 Hz	50/60 Hz	50/60 Hz
Operating temperature	–30°C to +55°C	–30°C to +55°C	–30°C to +55°C	–30°C to +55°C

 Copyright © Huawei Digital Power Technologies Co., Ltd.

Technical Specifications	LunaTMS2000-H008SG00	LunaTMS2000-H008SG10	LunaTMS2000-H008SG20	LunaTMS2000-H008SG30
Storage temperature	–35°C to +60°C	–35°C to +60°C	–35°C to +60°C	–35°C to +60°C
Operating humidity	5%–95% RH	5%–95% RH	5%–95% RH	5%–95% RH
LTMS dimensions (W x H x D)	660 mm x 1560 mm x 240 mm	660 mm x 1560 mm x 240 mm	660 mm x 1560 mm x 240 mm	660 mm x 1560 mm x 240 mm
LTMS net weight	92 kg	89 kg	92 kg	89 kg
Cooling capacity[1]	7.5 kW	5.3 kW	7.5 kW	5.3 kW
Coolant	50% ethylene glycol solution	50% ethylene glycol solution	50% ethylene glycol solution	50% ethylene glycol solution
Design life	10 years	10 years	10 years	10 years
Environmental protection	RoHS, REACH, and WEEE	RoHS, REACH, and WEEE	RoHS, REACH, and WEEE	RoHS, REACH, and WEEE
Refrigerant type	R134a	R134a	R1234yf	R1234yf
Refrigerant content	0.41 kg	0.41 kg	0.39 kg	0.39 kg
GWP (AR4[2])	1430	1430	4	4
CO_2 equivalent	0.5863 t	0.5863 t	0.00156 t	0.00156 t

Note:

[1] Battery side: ambient temperature 25°C/return water temperature 25°C; power side: ambient temperature 25°C/return water temperature ≤ 70°C.

[2] The global warming potential (GWP) values are calculated based on the Fourth Assessment Report (AR4) of the Intergovernmental Panel on Climate Change (IPCC).

 Copyright © Huawei Digital Power Technologies Co., Ltd.

2.5.3.3 T/H Sensor

Figure 2-17 T/H sensor appearance

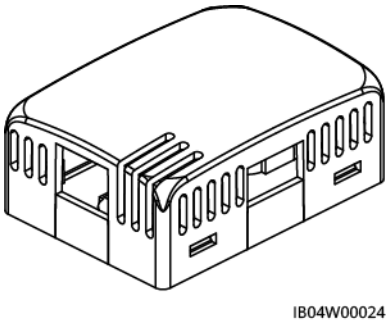

NOTE

The appearance of the T/H sensor delivered onsite may vary.

Technical Specifications	T/H Sensor
Temperature measurement range	–20°C to +80°C
Signal output	Two RJ45 ports, bidirectional cascading

Table 2-26 DIP switch settings

T/H Sensor Address	Toggle Switch 1	Toggle Switch 2	Toggle Switch 3	Toggle Switch 4	Toggle Switch 5	Toggle Switch 6
56	OFF	OFF	OFF	ON	ON	ON

2.5.3.4 Door Status Sensor

Figure 2-18 Appearance

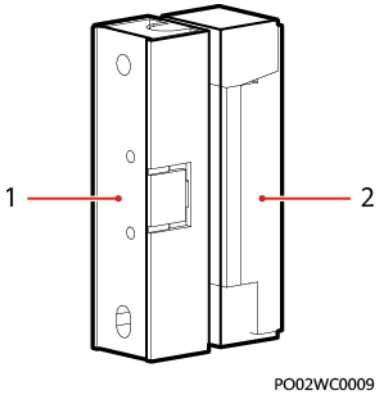

(1) Switch (2) Magnet

Technical Specifications	Door Status Sensor
Connection method	Wiring terminal
Startup distance	25–45 mm
Securing method	Screw
Hole spacing	40 mm±0.8 mm

2.5.3.5 Water Sensor

The water sensor detects water based on the resistance change between both electrodes.

When the electrodes detect water, they are short-circuited and the BCU reports an alarm.

Figure 2-19 Water sensor appearance

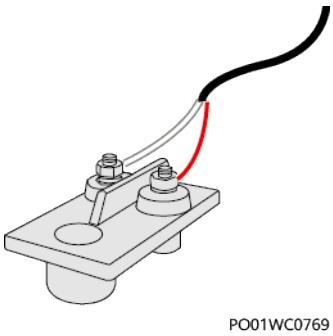

2.5.4 Thermal Runaway Suppression System

2.5.4.1 Thermal Runaway Suppression System Overview

Figure 2-20 Position of the thermal runaway suppression system

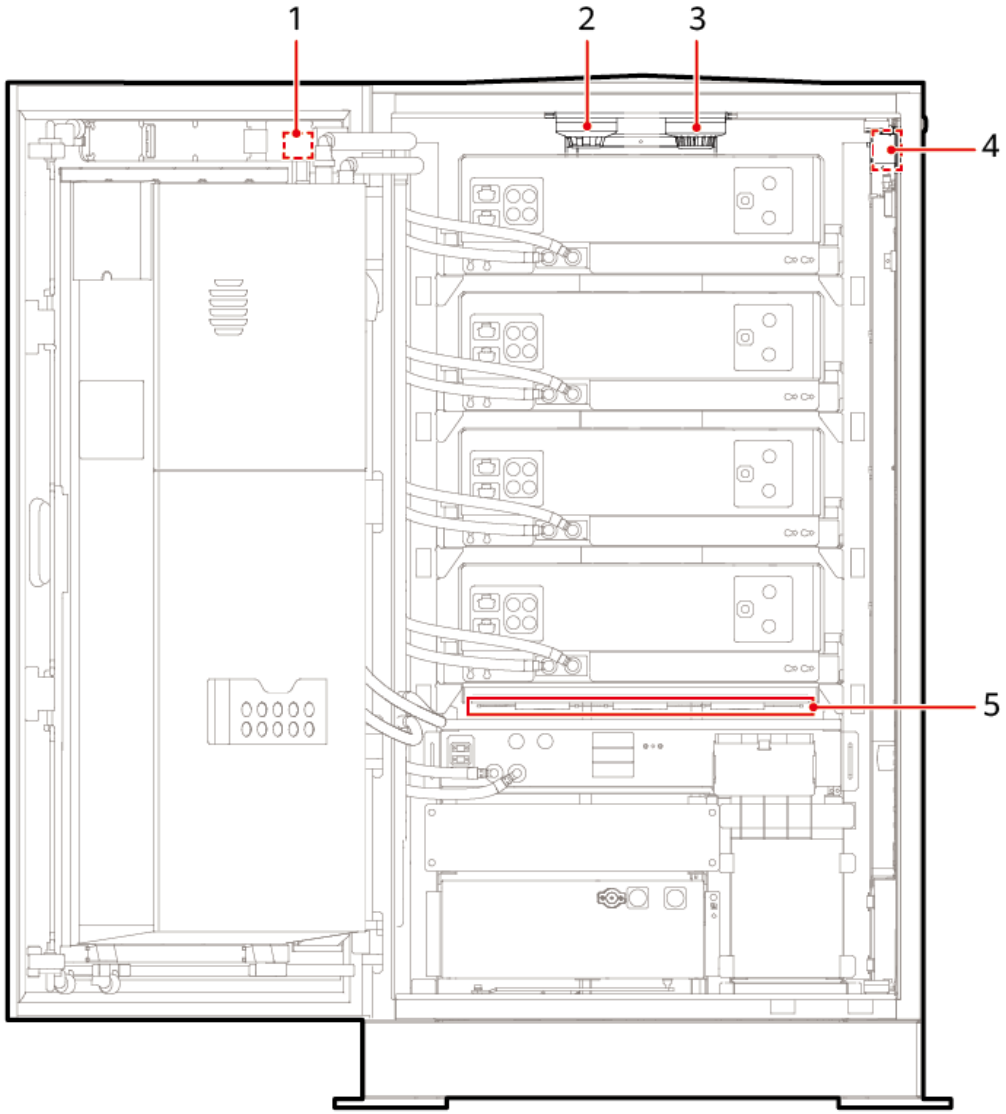

(1) Fire alarm horn/strobe	(2) Smoke detector
(3) Heat detector	(4) CO sensor
(5) Aerosol fire suppression device	

 Copyright © Huawei Digital Power Technologies Co., Ltd.

2.5.4.2 Aerosol Fire Suppression Device

Working Principles

When the aerosol fire suppression device senses the high temperature, it automatically starts and releases a large amount of aerosol particles to quickly suppress the fire.

Figure 2-21 Aerosol fire suppression device

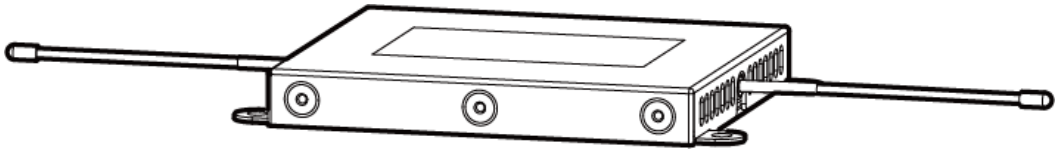

Technical Specifications	Aerosol Fire Suppression Device
Extinguishant	Aerosol
Startup mode	Hot start with temperature sensing
Startup temperature	185±15°C

2.5.4.3 Heat Detector

Figure 2-22 Appearance

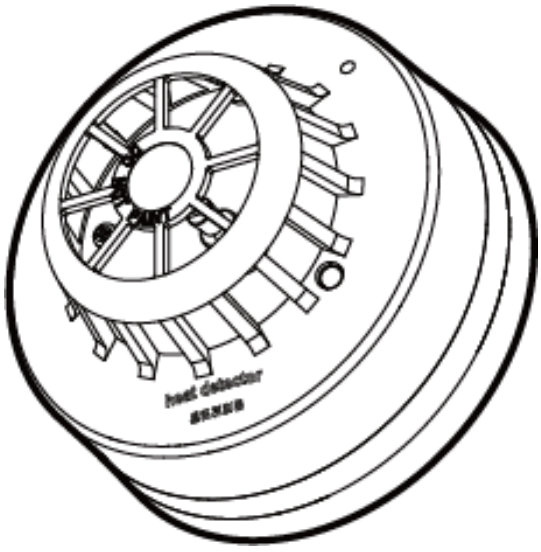

Technical Specifications	Heat Detector
Dimensions (diameter x height)	110 mm x 60 mm (with a base)
Installation mode	Securing with screws

 Copyright © Huawei Digital Power Technologies Co., Ltd.

Table 2-27 Indicator description

Name	Color	Status	Description
Indicator	Red	Steady on	The detector enters the alarm state.
		Blinking	The detector enters the monitoring state.

2.5.4.4 CO Sensor

Working Principles

The CO sensor can detect carbon monoxide in combustible gases released when the battery valve in the cabinet is open. If carbon monoxide is detected, the fire alarm horn/strobe will remind personnel to stay away. In addition, other devices will be triggered to reduce the gas concentration in the cabinet.

Figure 2-23 Appearance of a standard CO sensor

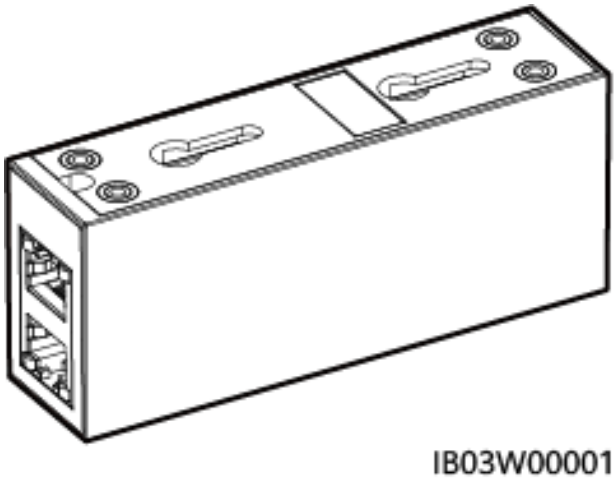

Technical Specifications	Standard CO Sensor
Output signal	RS485
Resolution	≤ 30 ppm
Response time	≤ 60s
Cabling mode	RJ45 network port
Installation mode	Gourd-shaped mounting hole/Nut/ Magnet

2.5.4.5 Smoke Detector

The smoke detector can detect the smoke concentration in the environment.

Figure 2-24 Appearance

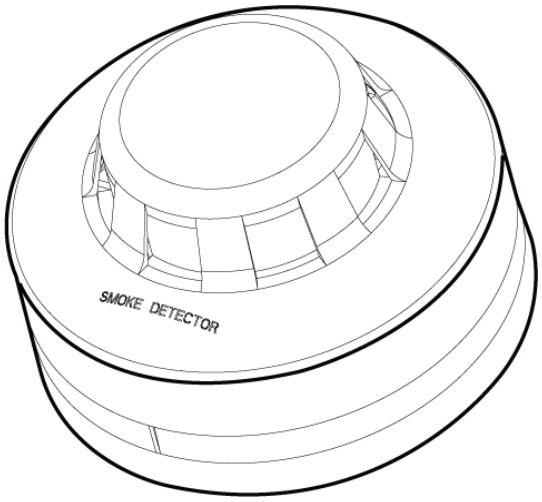

Technical Specifications	Smoke Detector
Dimensions (diameter x height)	110 mm x 60 mm (with a base)
Installation mode	Securing with screws

Table 2-28 Indicator description

Name	Color	Status	Description
Indicator	Red	Steady on	The detector enters the alarm state.
		Blinking	The detector enters the monitoring state.

2.5.4.6 Fire Alarm Horn/Strobe

A fire alarm horn/strobe consists of a control board, alarm indicators, and a buzzer. After receiving warning signals from devices such as the heat detector and smoke detector, the fire alarm horn/strobe starts and generates audible and visual alarm signals indicating potential dangers.

 Copyright © Huawei Digital Power Technologies Co., Ltd.

Figure 2-25 Fire alarm horn/strobe

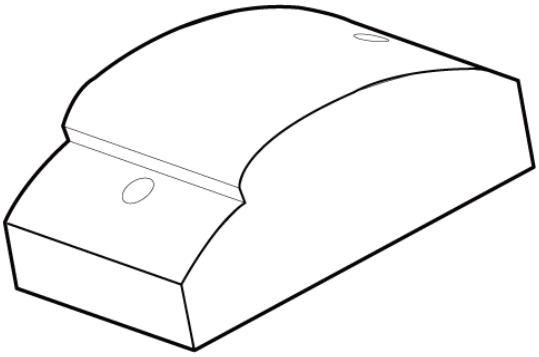

2.6 Working Principles

2.6.1 Circuit Diagram

NOTE

The ESS has various circuit diagrams. The following figures are for reference only.

Figure 2-26 Circuit diagram (with DCDC)

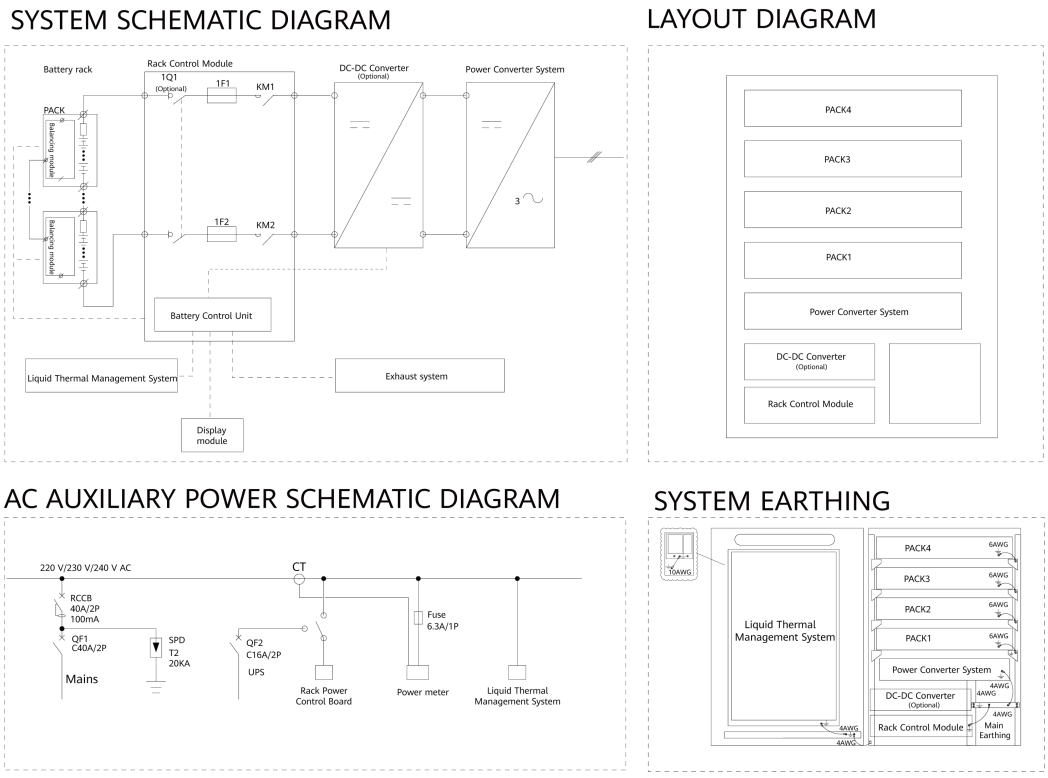

2.6.2 ESS Status

The ESS status includes running, start, standby, shutdown, terminal test, and offline.

Table 2-29 ESS status description

Status		Description
Running	Running: PQ mode	The ESS is running in PQ mode.
	Running: VSG mode	The ESS is running in VSG mode.
	Running: hot standby	The ESS is running in hot standby state.
	Running: limited power	The ESS is running in limited power state when the delivered power is less than the capability of the ESS.
	Running: power module derated	The ESS is running in power module derated state.
	Running: battery current limiting	The ESS is running in battery current limiting state.
	Running: ESS derated	The ESS is running in ESS derated state.
	Running: locked	The ESS is running based on the local power reference and does not receive external power adjustment.
Start		During the soft start of the ESS, not all components are running.
Standby		The ESS performs the initialization self-check.
Shut down	Shut down: on fault	The ESS enters the shutdown state due to a fault.
	Shut down: on command	The ESS enters the shutdown state upon receiving a shutdown command.
	Shut down: no startup authorization	The ESS is in the shutdown state as it does not receive startup authorization.
	Shut down: power limited	The power is limited to 0. After the shutdown function is enabled, the ESS enters the shutdown state because the power is adjusted to 0. When a non-zero power command is received, the ESS automatically starts.
	Shut down: EPO	The ESS is in the shutdown state due to emergency power-off (EPO).
	Shut down: PCS shut down	Only the PCS of the ESS is shut down. The ESS is not in hibernation mode.

Status		Description
Terminal test	Terminal test: ready for terminal test	The ESS is ready for the terminal test and is waiting for the next command of the terminal test.
	Terminal test: in progress	The ESS is in the progress of the terminal test.
Offline	Offline	The ESS is not connected to the monitoring platform.
	Loading	The ESS is connecting to the monitoring platform.

2.7 Earthing Systems

The ESS supports the TN-S, TN-C, TN-C-S, TT, and IT earthing systems.

NOTICE

- For the TN-S, TN-C, TN-C-S, and TT systems, the neutral wire of the ESS must be connected to the power grid.
- For the IT system, the ESS is connected to the isolation transformer in three-phase four-wire mode, and then the isolation transformer is connected to the power grid. The neutral point of the isolation transformer (on the ESS side) must be grounded.
- For details about the electrical networking, see the corresponding **solution user manual**.

 Copyright © Huawei Digital Power Technologies Co., Ltd.

Figure 2-27 Earthing systems

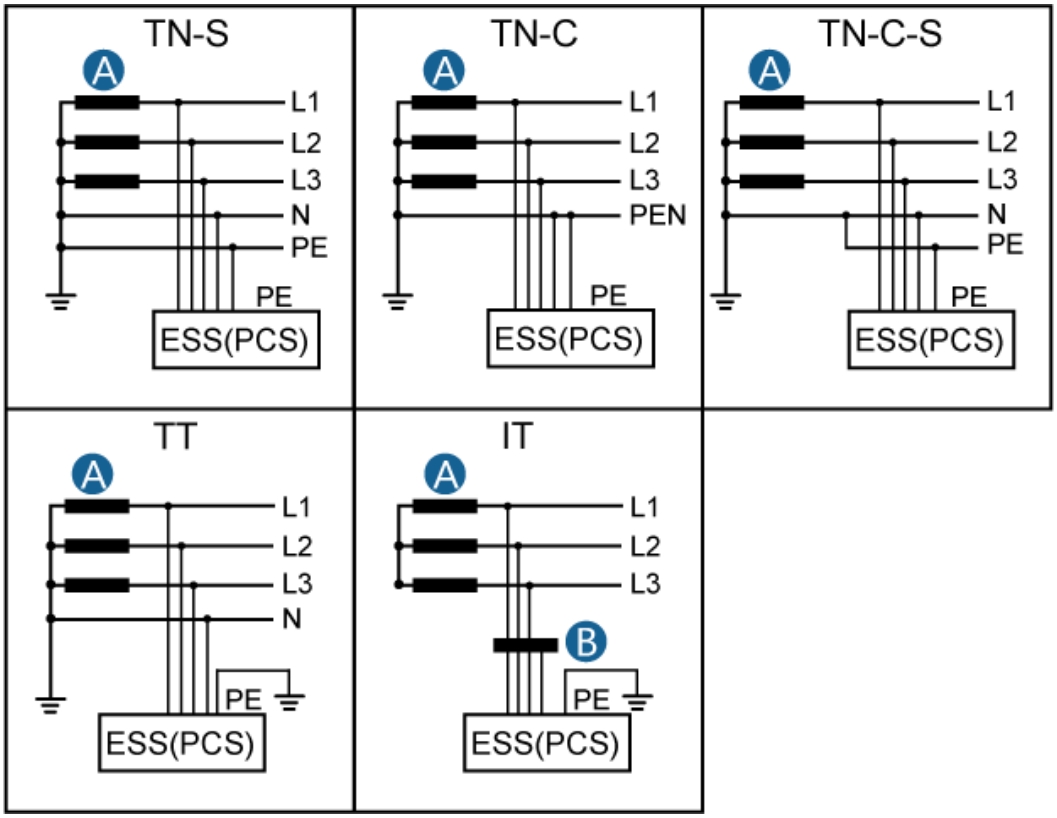

A: Transformer B: Isolation transformer

 Copyright © Huawei Digital Power Technologies Co., Ltd.

3 Transportation Requirements

3.1 General Requirements

DANGER

Load or unload batteries with caution. Otherwise, the batteries may be short-circuited or damaged (such as leakage and crack), catch fire, or explode.

WARNING

Do not move a battery by holding its terminals, bolts, or cables. Otherwise, the battery may be damaged.

Keep batteries in the correct direction during transportation. They must not be placed upside down or tilted, and must be protected against falling down, mechanical impact, rains, snows, and falling into water during transportation.

- According to the UN *Recommendations on the Transport of Dangerous Goods: Model Regulations* (also referred to as TDG or UN Orange Book), batteries belong to class 9 dangerous goods and shall pass the related tests required in Part III Subsection 38.3 of the UN *Recommendations on the Transport of Dangerous Goods: Manual of Tests and Criteria*.
- Transportation and storage service providers must have the qualifications for dangerous goods operations required by local laws, regulations, and standards. Rigid box trucks shall be used for transportation and pickup trucks are prohibited.
- Comply with the latest international and national rules on the transportation and storage of dangerous goods, including but not limited to the *International Maritime Dangerous Goods Code* (IMDG Code), *Agreement concerning the International Carriage of Dangerous Goods by Road* (ADR), and China's transportation industry standards (JT/T 617) *Regulations concerning road transportation of dangerous goods*, as well as the requirements of the transportation regulatory authorities in the countries of

 Copyright © Huawei Digital Power Technologies Co., Ltd.

departure, route, and destination. Before transportation and storage, properly pack, label, and mark products according to the local laws, regulations, and standards, and complete related product and packaging tests.

- Choose sea or roads in good conditions for transportation. Do not transport the equipment by railway or air. Avoid tilt or jolt during transportation.
- Before transportation, make a compliant and accurate declaration. Ensure that the battery packaging, labels, and markings are intact and there is no abnormal smell, leakage, smoke, or fire. Otherwise, the batteries must not be transported.
- The packing case must be solid and strong. Handle the packages with care and take moisture-proof measures during loading, transportation, and unloading. Do not place the packages on one side or upside down. Bind the packages securely to avoid displacement. Ensure that the dangerous goods labels are visible.
- Handle the ESS with care during loading, unloading, and transportation, and ensure that moisture-proof measures are in place. The product specifications upon delivery may be affected subsequently by the environment conditions, such as temperature, transportation, and storage.
- Unless otherwise specified, dangerous goods must not be mixed with goods containing food, medicine, animal feed, or their additives in the same vehicle or container, and sharp objects are not allowed in the same vehicle or container.
- If the local laws, regulations, and standards allow the mixed transportation of specified different dangerous goods and that of dangerous goods and common goods, the dangerous goods shall be isolated according to the local laws, regulations, and standards. If there is no specific local requirement, refer to the following requirements for isolation when dangerous goods and common goods are in the same vehicle or container:
  - Use a spacer that is as high as the packages.
  - Keep a distance of at least 0.8 m around.
- Before transporting a faulty battery (with scorch, leakage, bulge, or water intrusion), insulate its positive and negative terminals, pack it, and place it in an insulated explosion-proof box as soon as possible. Record information such as the site name, address, time, and fault symptom on the box.
- When transporting faulty batteries, avoid approaching flammable material storage areas, residential areas, or other densely populated places, such as mass transit facilities or elevators.
- Exercise caution when moving batteries to prevent bumping and ensure personal safety.
- Store batteries in a separate area away from heat sources. Protect batteries from moisture, water, and rain. Stack batteries according to the labels on the packing case. Do not stack batteries more than the allowed stacking layers. Do not place batteries on one side or upside down.
- When moving and transporting the LTMS, keep it upright. Do not place it horizontally or upside down. If the package of the LTMS is damaged or the tilt indicator on the package has changed color, contact the Company's service engineers.

 Copyright © Huawei Digital Power Technologies Co., Ltd.

3.2 Loading and Unloading Requirements

WARNING

- Do not use a manual pallet truck to move the cabinet on a slope.
- Only a powered industrial forklift can be used to move the cabinet on a slope. The forklift must have sufficient power and its center of gravity must be stable to ensure safety during transportation on a slope.
- The forklift tynes must be in the middle of the ESS and must extend out of the cabinet.

- Based on the site survey, if there is no unloading platform where a vehicle can pull over at the unloading point, prepare an unloading solution in advance.
  - If there is no unloading platform, you are advised to select a delivery vehicle with side-opening doors and use a powered industrial forklift for unloading.
  - If there is no unloading platform and only a container truck can be used for delivery, you are advised to use a manual or powered pallet truck to move the goods to the container truck door, and then use a powered industrial forklift to unload the goods, or use other solutions for safe unloading.
- Forklift requirements for loading and unloading: Internal combustion or electric powered industrial forklift: load-bearing capacity ≥ 4 t; tyne length ≥ 2000 mm; adjustable tyne spacing.
- During loading and unloading, tynes must be in the middle of the ESS and must extend out of the cabinet.
- Do not use a manual or powered pallet truck to move the cabinet on a slope. Only a powered industrial forklift can be used to move the cabinet on a slope. The forklift must have sufficient power, its center of gravity must be stable, and the forklift driver's sight must not be blocked to ensure safety during transportation on a slope.

  NOTE

  - A forklift can be inserted from the front only during loading and unloading. Insertion from the front is not allowed for transshipment.
  - Do not turn when the lift height is ≥ 300 mm. Unload only on flat ground. Keep clear of cargo containers and buildings.

 Copyright © Huawei Digital Power Technologies Co., Ltd.

Figure 3-1 Loading and unloading requirements

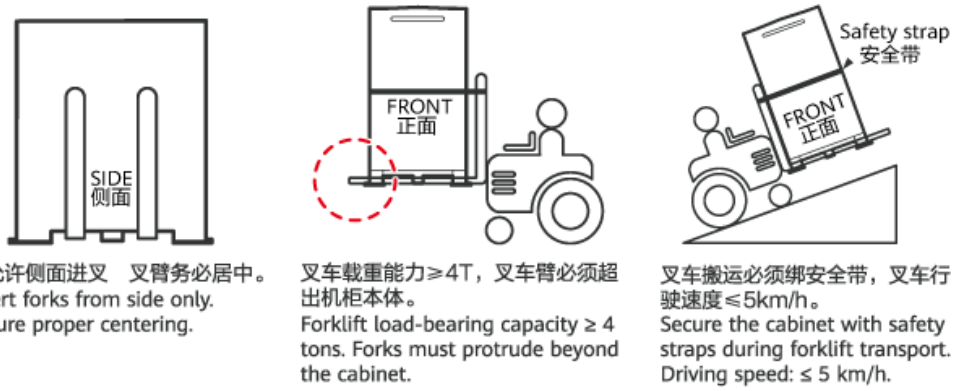

仅允许侧面进叉　叉臂务必居中。
Insert forks from side only.
Ensure proper centering.

叉车载重能力≥4T，叉车臂必须超出机柜本体。
Forklift load-bearing capacity ≥ 4 tons. Forks must protrude beyond the cabinet.

叉车搬运必须绑安全带，叉车行驶速度≤5km/h。
Secure the cabinet with safety straps during forklift transport.
Driving speed: ≤ 5 km/h.

 Copyright © Huawei Digital Power Technologies Co., Ltd.

4 Storage Requirements

General Requirements

- Proof that the product is stored according to the requirements must be available, such as temperature and humidity log data, storage environment photos, and inspection reports.
- Store the product in a clean and dry place and protect it from dust and moisture. The product must be protected against rain and water.
- The air must not contain corrosive or flammable gases.
- Do not tilt the product or place it upside down.
- If the equipment except battery packs has been stored for two years or longer, it must be checked and tested by professionals before use.

4.1 ESS Storage Requirements

Storage Requirements

WARNING

- You are advised to store the ESS in a dry, clean, and ventilated indoor environment that is free from sources of strong infrared or other radiations, organic solvents, corrosive gases, and conductive metal dust. Do not expose the ESS to direct sunlight or rain. Keep the ESS far away from sources of heat and fire.
- Store the ESS separately to avoid mixing with other equipment. The site must be equipped with qualified fire fighting facilities, such as fire sand and fire extinguishers.

CAUTION

It is recommended that the ESS be used soon after being deployed onsite. The ESS that has been stored for an extended period or has not been put into operation shall be charged periodically. Otherwise, the ESS may be damaged.

 Copyright © Huawei Digital Power Technologies Co., Ltd.

- Place the ESS correctly according to the signs on the packing case during storage. Do not place the ESS upside down, lay it on one side, or tilt it.
- The ESS packaging signs are described as follows.

Name	Symbol	Description
This way up		The package shall be kept upright during transportation and storage.
Fragile		The package contains fragile objects and shall be handled with care.
Keep dry		The package shall be protected against rain, and rainproof measures shall be taken during transportation and storage.
Do not roll	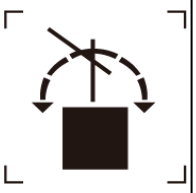	The package shall not be rolled during transportation.
Do not stack	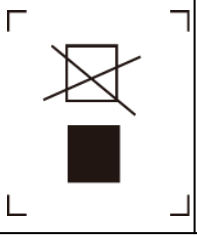	The package shall not be stacked.

- The storage environment requirements are as follows:
  - Ambient temperature: –35°C to +60°C (0°C to 30°C are recommended. If the ESS is stored at a temperature higher than 40°C for extended periods, the battery performance and service life may be deteriorated.)
  - Relative humidity: 5%–95% RH (recommended: about 45% RH)
  - Dry, clean, and well-ventilated
  - Away from corrosive organic solvents and gases
  - Away from direct sunlight
  - At least 2 m away from heat sources
- The ESS must be disconnected from external equipment during storage, and the ESS indicators must be off.

- The storage duration starts from the latest charge time labeled on the ESS packaging. If the ESS is qualified after charge, update the latest charge time (recommended format: YYYY-MM-DD HH:MM) and the next charge time (Next charge time = Latest charge time + Charge interval) on the label.
- The following table lists the maximum charge intervals. Charge the ESS promptly and calibrate the SOC to 50%. Otherwise, the battery performance and service life may be deteriorated.

Storage Temperature (T)	Maximum Charge Interval[a]
-35℃≤T≤30℃	15 months
30℃<T≤40℃	11 months
40℃<T≤60℃	7 months
Note a: • The interval starts from the latest charge time labeled on the ESS packaging. • This table lists the charging intervals when the SOC is 50%.	

- Do not remove the packaging from the ESS. If charging is necessary, the ESS must be charged by professionals as required and then returned to their original packaging after charging.
- The warehouse keeper shall collect the ESS storage information every month and periodically report the ESS inventory information. The ESS in long-term storage must be charged promptly.

⚠ CAUTION

- Only trained and qualified personnel are allowed to charge batteries. Wear insulated gloves and use dedicated insulated tools during the operation.
- Observe onsite during charge and handle any exceptions in a timely manner.
- If a battery experiences an abnormality such as bulging or smoking during charge, stop charging immediately and dispose of it.

- When stored in low SOC, the batteries must be charged within the maximum interval corresponding to the SOC when the batteries are powered off. If the ESS is not charged within the specified interval, the batteries may be damaged due to overdischarge.

Power-Off SOC Before Storage	Maximum Charge Interval
SOC = 50%	See the maximum charge intervals when the SOC is 50%.
30% ≤ SOC < 50%	4 months
5% ≤ SOC < 30%	20 days

 Copyright © Huawei Digital Power Technologies Co., Ltd.

Power-Off SOC Before Storage	Maximum Charge Interval
SOC < 5%	48 hours

- AC mains input voltage requirements for charging:
  - 220 V (three-phase 380–480 V AC and single-phase 176–300 V AC)
  - AC input power cables used for charging the ESS in the warehouse must have a through-current capacity greater than 60 A.
- If the ESS has been stored for longer than allowed, promptly report the condition to the person in charge.
- Ensure that the ESSs are delivered on a "first-in, first-out" basis.
- Handle the ESS with care to prevent damage.

4.2 Battery Storage and Recharge

When batteries are stored as spare parts and will not be used immediately, the following storage requirements must be met:

Material Delivery Check

There must be a battery charge label on the packing case. The charge label must specify the latest charge time and the next charge time.

 Copyright © Huawei Digital Power Technologies Co., Ltd.

Storage Requirements

WARNING

- Ensure that batteries are stored in a dry, clean, and ventilated indoor environment that is free from sources of strong infrared or other radiations, organic solvents, corrosive gases, and conductive metal dust. Do not expose batteries to direct sunlight or rain and keep them far away from sources of heat and ignition.
- If a battery is faulty (with scorch, leakage, bulge, or water intrusion), move it to a dangerous goods warehouse for separate storage. The distance between the battery and any combustible materials must be at least 3 m. The battery must be scrapped as soon as possible.
- Place batteries correctly according to the signs on the packing case during storage. Do not place batteries upside down, lay them on one side, or tilt them. Stack batteries in accordance with the stacking requirements on the packing cases.
- Store batteries in a separate place. Do not store batteries together with other devices. Do not stack batteries too high. The site must be equipped with qualified fire fighting facilities, such as fire sand and fire extinguishers.
- After batteries are powered off, static power consumption and self-discharge loss may occur in internal modules, which may cause battery damage due to overdischarge. Do not store batteries in low SOC and charge batteries in a timely manner. Permanent battery faults caused by delayed charge are not covered by the warranty. Storing the batteries in low SOC occurs in scenarios including but not limited to the following:
  - The power cables or signal cables are not connected.
  - The batteries cannot be charged due to a system fault after discharge.
  - The batteries cannot be charged due to incorrect configurations in the system.
  - The batteries cannot be charged due to long-term mains failure.
  - The batteries cannot be charged because the switch of the Smart Rack Controller, Smart PCS, or main loop component is off.

CAUTION

It is recommended that batteries be used soon after being deployed onsite. Batteries that have been stored for an extended period shall be charged periodically. Otherwise, they may be damaged.

- Packaging label description

 Copyright © Huawei Digital Power Technologies Co., Ltd.

Label	Description
	This way up: The package shall be vertically oriented during transport and storage.
	Fragile: The package contains fragile objects and shall be handled with care.
	Keep dry: The package shall be kept away from rain.
	Stacking limit by number: The packages shall not be vertically stacked beyond the specified number. The actual label may vary.

- The storage environment requirements are as follows:
  - Ambient temperature: –40°C to +60°C (0°C to 40°C are recommended. If batteries are stored at a temperature higher than 40°C for extended periods, the battery performance and service life may be deteriorated.)
  - Relative humidity: 5%–95% RH (recommended: about 45% RH)
  - Dry, clean, and well-ventilated
  - Away from corrosive organic solvents and gases
  - Away from direct sunlight
  - At least 2 m away from heat sources
- The batteries in storage must be disconnected from external devices. The indicators (if any) on the batteries must be off.
- The storage duration starts from the latest charge time labeled on the battery package. If a battery is qualified after charge, update the latest charge time (recommended format: YYYY-MM-DD HH:MM) and the next charge time (Next charge time = Latest charge time + Charge interval) on the label.
- The following table lists the maximum charge intervals. Charge the ESS promptly and calibrate the SOC to 50%. Otherwise, the battery performance and service life may be deteriorated.

Storage Temperature (T)	Maximum Charge Interval[a]
-35℃≤T≤30℃	15 months
30℃<T≤40℃	11 months
40℃<T≤60℃	7 months
Note a: • The interval starts from the latest charge time labeled on the ESS packaging. • This table lists the charging intervals when the SOC is 50%.	

- Do not unpack batteries. If charging is necessary, they must be charged by professionals as required and then returned to their original packaging after charging.
- The warehouse keeper shall collect battery storage information every month and periodically report the battery inventory information. The batteries in long-term storage must be charged in a timely manner.

⚠ CAUTION

- Only trained and qualified personnel are allowed to charge batteries. Wear insulated gloves and use dedicated insulated tools during the operation.
- Observe onsite during charge and handle any exceptions in a timely manner.
- If a battery experiences an abnormality such as bulging or smoking during charge, stop charging immediately and dispose of it.

- When stored in low SOC, the batteries must be charged within the maximum interval corresponding to the SOC when the batteries are powered off. If the ESS is not charged within the specified interval, the batteries may be damaged due to overdischarge.

Power-Off SOC Before Storage	Maximum Charge Interval
SOC = 50%	See the maximum charge intervals when the SOC is 50%.
30% ≤ SOC < 50%	4 months
5% ≤ SOC < 30%	20 days
SOC < 5%	48 hours

- AC mains input voltage requirements for charging:
  - 220 V (three-phase 260–530 V AC or single-phase 176–300 V AC)
  - 110 V (three-phase 130–265 V AC or single-phase 90–175 V AC)
  - AC input power cables used for charging in the warehouse must have a through-current capacity greater than 40 A.

 Copyright © Huawei Digital Power Technologies Co., Ltd.

- If batteries have been stored for longer than allowed, promptly report the event to the person in charge.
- Ensure that batteries are delivered based on the "first in, first out" rule.
- Handle batteries with caution to avoid damage.

Conditions for Determining Overdue Storage of Battery Packs

- Do not store batteries for extended periods.
- The following table lists the maximum charge intervals. Charge the ESS promptly and calibrate the SOC to 50%. Otherwise, the battery performance and service life may be deteriorated.

Storage Temperature (T)	Maximum Charge Interval[a]
-35℃≤T≤30℃	15 months
30℃<T≤40℃	11 months
40℃<T≤60℃	7 months
Note a: ● The interval starts from the latest charge time labeled on the ESS packaging. ● This table lists the charging intervals when the SOC is 50%.	

- When stored in low SOC, the batteries must be charged within the maximum interval corresponding to the SOC when the batteries are powered off. If the ESS is not charged within the specified interval, the batteries may be damaged due to overdischarge.

Power-Off SOC Before Storage	Maximum Charge Interval
SOC = 50%	See the maximum charge intervals when the SOC is 50%.
30% ≤ SOC < 50%	4 months
5% ≤ SOC < 30%	20 days
SOC < 5%	48 hours

- If batteries have been stored for longer than allowed, promptly report the event to the person in charge.
- Dispose of deformed, damaged, or leaking batteries directly irrespective of how long they have been stored.
- The storage duration starts from the latest charge time labeled on the battery package. If a battery is qualified after charge, update the latest charge time (recommended format: YYYY-MM-DD HH:MM) and the next charge time (Next charge time = Latest charge time + Charge interval) on the label.
- Batteries can be charged for a maximum of three times during storage. Dispose of batteries if the maximum charge times are exceeded.

 Copyright © Huawei Digital Power Technologies Co., Ltd.

Preparing Charging Devices

- Multimeter
- Clamp meter
- Insulated torque socket wrench
- Charger
- BCU

Inspection Before Charge

1. Before charging a battery, you need to check its appearance. Charge the qualified battery or dispose of the unqualified one.
2. The battery is qualified if it is free from the following symptoms:
   - Deformation
   - Shell damage
   - Leakage
3. Check that the accessories are complete based on the packing list delivered with the charger.

Full Charge Strategy

The charging ambient temperature ranges from 15°C to 40°C.

Charge Current (Unit: Ampere)	Charging Duration (Excluding Equalization)
15	19 hours (fully discharge the battery and then charge the battery to 50% SOC)
40[1]	8 hours (fully discharge the battery and then charge the battery to 50% SOC)
Note 1: In three-phase input mode, use the 380 V AC/40 A power cable delivered with the charger.	

Charging Procedure

NOTE

- Prepare battery packs that are qualified for charging.
- You need to purchase the communications cables and positive and negative DC input cables used with the charger from the Company.
- You need to purchase the BCU and its communications cables from the Company.

Step 1 Connect the communications cable from the communications port of the charger to the FE communications port of the BCU.

Step 2 Connect the communications cable from the CON communications port 1 of the BCU to the communications port of the battery pack.

 Copyright © Huawei Digital Power Technologies Co., Ltd.

Step 3 Connect the positive and negative DC input power cables from the charger power ports to the battery pack power ports (general power ports).

Step 4 Connect the AC INPUT port on the charger to the utility power source using the power cable delivered with the charger.

Step 5 Turn on the AC circuit breaker of the charger.

Step 6 Turn on the DC circuit breaker of the charger.

Step 7 Operate the charger according to its manual.

Step 8 After the discharge and charge are complete, wait until the fan in the charger keeps running for about 5 minutes to dissipate the residual heat, turn off the AC and DC circuit breakers, and remove the cables.

----End

4.3 RCM/PCS/DCDC/LTMS Storage

When devices are stored as spare parts and will not be put into use immediately, the following storage requirements must be met:

- If devices are unpacked but will not be used immediately, put them back to the original packaging with the desiccant, and seal with tape.
- When temporarily storing devices outdoors, do not stack them on a pallet. Take rainproof measures such as using tarpaulins to protect devices from rain and water.
- Storage temperature: –35°C to +60°C; relative humidity: 5%–95% RH
- Do not remove the packaging. Check the packaging regularly (recommended: once every three months). Replace any packaging that is damaged during storage.
- Do not store devices for more than two years. If devices have been stored for two years or longer, they must be checked and tested by professionals before being put into use.
- To avoid personal injury or device damage, exercise caution when stacking devices to prevent them from falling over.

4.4 Storage Requirements for Thermal Runaway Suppression System Equipment

- At room temperature (about 25°C), charge the lead-acid battery for the TRSD at least once every six months. The charge interval is halved for every 10°C increase in temperature.
- When the fire suppression equipment is stored as spare parts, the ambient temperature shall range from 0°C to 50°C and the humidity shall be less than or equal to 95% RH.

 Copyright © Huawei Digital Power Technologies Co., Ltd.

5 Site Requirements

For the graphic description of site requirements, see **HUAWEI LUNA2000-(107-241) Series Commercial and Industrial Hybrid Cooling Grid Forming ESS Site Requirements**.

5.1 Site Selection Requirements

NOTICE

The ESS site selection and fire safety must comply with local laws and regulations. Reference standards include but are not limited to the *NFPA 855 Standard for the Installation of Stationary Energy Storage Systems*.

- The ESS site selection and installation shall comply with local ESS standards and fire protection regulations or standards.
- The ESS applies only to outdoor scenarios and must not be deployed indoors.
- If an overhead structure is necessary above the top of the ESS, the following conditions must be met:
  - The distance between the overhead structure and the top of the ESS shall be greater than 1.4 m.
  - The overhead structure shall be non-combustible.

  If the overhead structure may be damaged in extreme cases, the Company shall not be liable for any damage to the overhead structure.
- There shall be no vegetation or flammables within 3 m of both the ESS and the ESS plant site. Single specimens of trees, shrubbery, or cultivated ground cover such as green grass, ivy, succulents, or similar plants used as ground covers shall be permitted to be exempt provided that they do not form a means of readily transmitting fire.
- The distance between the ESS and flammable and explosive hazards such as fuel dispensers, oil tanks, gas tanks, and hydrogen dispensers shall be ≥ 7.6 m. The distance must not be shortened by using a fire wall.
- The ESS shall be at least 3 m away from key positions such as main entrances and fresh air systems in densely populated places such as schools, hospitals,

 Copyright © Huawei Digital Power Technologies Co., Ltd.

hotels, and shopping malls. The distance must not be shortened by using a fire wall.

- The ESS shall be at least 3 m away from buildings, public roads, and parking spots. If either of the following conditions is met, the distance between the ESS and buildings, public roads, and parking spots shall be permitted to be reduced to 0.9 m. In addition, clearance requirements for equipment transportation, installation, and maintenance shall be considered.
  - There is a fire wall with a 2-hour fire resistance rating between the ESS and buildings, public roads, and parking spots. The fire wall shall extend 1 m above and 1 m beyond the physical boundary of the ESS.
  - The building walls near the ESS have a 2-hour fire resistance rating and are free of openings and combustible exterior decoration, or the openings and combustible exterior decoration are at least 3 m away from the ESS.
- Transportation to the site shall be convenient, with fire engines able to reach it via surrounding roads.

  NOTE

  - When installing, commissioning, and operating the ESS, ensure that at least two gas fire extinguishers, such as heptafluoropropane, perfluorohexanone, or carbon dioxide fire extinguishers, are provided near each unit to ensure fire safety.
  - Reserve water supply ports for the water fire suppression system at the ESS site.
- The ESS shall not be installed in salt-affected or polluted areas because this will cause corrosion. The ESS shall be used in the following or better environments:
  - Outdoor environment more than 2000 m away from the coast. You are advised not to use the ESS in an area within 2000 m of the coast. (If you need to use it, confirm with the vendor or the Company's engineers.)
  - More than 3000 m away from heavy pollution sources such as smelteries, coal mines, and thermal power plants.
  - More than 2000 m away from medium pollution sources such as chemical, rubber, and electroplating industries.
  - More than 1000 m away from light pollution sources such as packing houses, tanneries, boiler rooms, slaughterhouses, landfill sites, and sewage treatment plants.
- The horizontal level of the installation site shall be above the highest water level of that area in history and at least 300 mm above the ground. The site must not be located in a low-lying land.
- The ESS and the site must be in an environment free from explosion risks.
- The site shall be in a well-ventilated place.

Do not select the sites that are not recommended by industry standards and regulations, including but not limited to the following areas:

- Areas with sources of strong vibration, loud noises, and strong electromagnetic interference
- Areas with dust, oil fumes, harmful gases, corrosive gases, etc.
- Areas with corrosive, flammable, and explosive materials
- Areas with existing underground facilities

- Areas with adverse geological conditions such as rubbery soil and soft soil layer, or prone to waterlogging and land subsidence
- Under a reservoir, water landscape, and water room

  NOTE

  - If areas prone to waterlogging cannot be avoided, install water blocking and drainage facilities or raise the ground.
  - Cable trenches shall not be used for drainage. Fire retardant sealing shall be implemented at cable holes (such as holes through partition walls and floors).
- Areas prone to earthquakes and with seismic fortification intensity higher than 9
- Areas prone to debris flow, landslide, quicksand, karst caves, and other direct hazards
- Areas within the mining land subsidence (dislocation) zone
- Areas within the scope of blasting hazard
- Areas prone to flood due to a dam or levee failure
- Protection areas for important water supply sources
- Protection areas for historic relics
- Populated areas, high-rise buildings, and underground buildings
- Intersections and busy roads of urban main roads

NOTE

You are advised to select another site if the safety distance for a site cannot meet the requirements of relevant national standards.

Security fencing:

It is recommended that physical walls or fences be used for isolation and protection in the energy storage equipment area. The fences shall be equipped with a door lock and the recommended fence height is greater than 2.2 m. Fire walls shall be permitted to be substituted for part or all of the fences, depending on the actual design plans.

5.2 Installation and Maintenance Clearance Requirements

The following figure shows the minimum installation and maintenance clearance requirements. Equipment clearances must also comply with the requirements in **5.1 Site Selection Requirements**, with the larger value taking precedence.

Figure 5-1 Clearance requirements

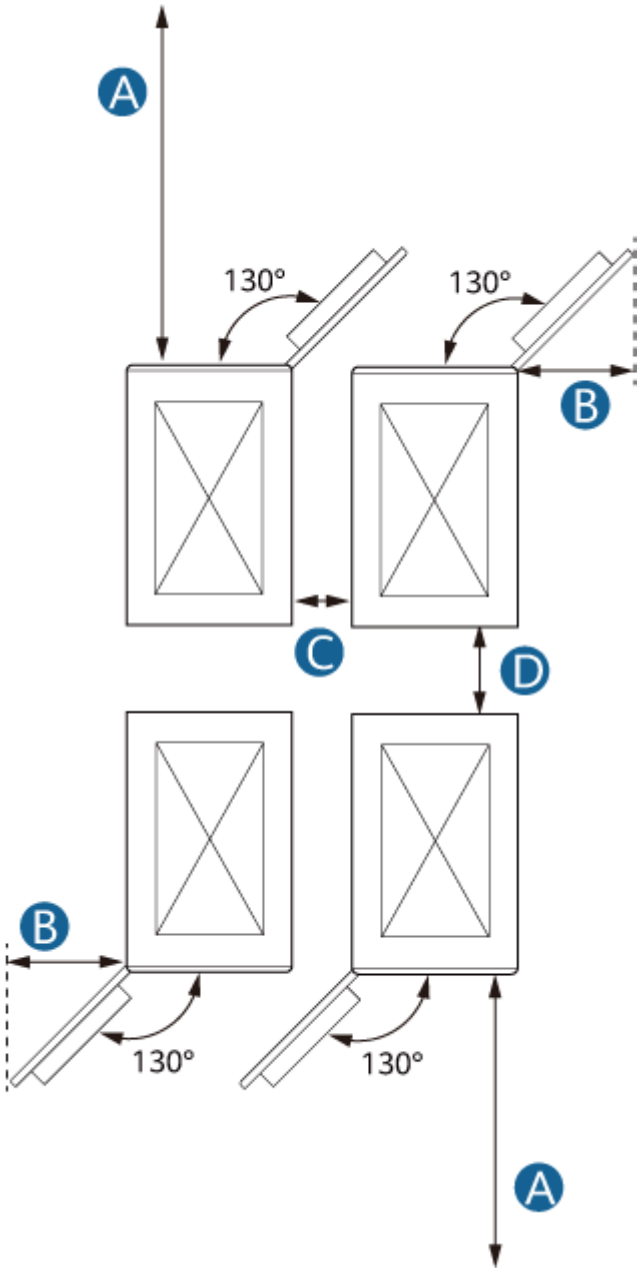

A	The installation and maintenance clearance in front of the ESS shall be ≥ 2500 mm to ensure that the battery pack can be replaced properly. If the front side faces a building or road, the clearance must also meet the requirements in **5.1 Site Selection Requirements**, with the larger value taking precedence.

 Copyright © Huawei Digital Power Technologies Co., Ltd.

B	The installation and maintenance clearance on the side where the ESS door will open shall be ≥ 750 mm to ensure that there is no obstacle in the door opening path. If the side faces a building or road, the clearance must also meet the requirements in **5.1 Site Selection Requirements**, with the larger value taking precedence.
C	The installation and maintenance clearance between the sides of ESSs shall be ≥ 100 mm.
D	The installation and maintenance clearance at the rear of the ESS shall be sufficient to allow normal maintenance operations. • Scenario 1: If the ESS is secured using **four anchor brackets** (recommended), the recommended clearance is ≥ 600 mm. • Scenario 2: If the ESS is secured using **three anchor brackets**, the recommended clearance is ≥ 300 mm. Each time a cabinet is hoisted into position, level and secure the cabinet and install its PE cable.

5.3 Foundation Requirements

Requirements for foundation design solution:

- The ESS must be installed on concrete or other non-combustible surfaces. Ensure that the installation surface is horizontal, secure, flat, and has sufficient load-bearing capacity. Subsidence or slope is not allowed.
- The foundation shall sustain the total weight of the equipment. If the load-bearing capacity of the foundation does not meet the requirement, a review is required.
- The bottom of the excavated foundation must be compacted and flat.
- After the foundation is excavated, prevent water from entering the foundation. If water enters the foundation, excavate and refill the affected parts.
- The levelness tolerance between the foundation and the contact surface of the cabinet must be less than or equal to 3 mm.
- The foundation must be above the highest water level of the local area in history and at least 300 mm above the ground.
- Construct drainage facilities based on the local geological conditions and municipal drainage requirements to ensure that no water will accumulate at

 Copyright © Huawei Digital Power Technologies Co., Ltd.

the equipment foundation. The foundation construction must meet the local drainage requirements for the maximum historical rainfall. The drained water must be disposed of in accordance with local laws and regulations.

- Reserve trenches or cable inlets for the ESS during foundation construction.
- The reserved holes on the foundation and the cable inlets at the bottom of the equipment shall be sealed.
- Contact the product manager of the Company to obtain the foundation drawings. The design specifications of the ESS foundation shall be reviewed based on the installation environment, ground bearing capacity, geological features, and seismic resistant requirements of the project site.
- The installation and O&M scenarios must be considered during the foundation design to reserve forklift passages and space.

5.4 Forklift Requirements

- If a forklift is used to install the ESS cabinet, ensure that the forklift has a load-bearing capacity of at least 4 t.
- It is recommended that the length of the tynes be greater than or equal to 2000 mm and the thickness be 25–80 mm.
- Lifting height of a forklift: The lifting height shall be greater than or equal to local foundation height + 0.2 m. For example, if the local foundation height is 0.3 m, the lifting height shall be greater than or equal to 0.5 m.

5.5 Hoisting Requirements

- Before hoisting, ensure that the crane and hoisting ropes meet the load-bearing requirements.
- When installing or removing the hoisting equipment, do not drag it on the cabinet to prevent scratches.

Stage	Precaution
Before hoisting	Crane hoisting capacity ≥ 3 t, operating radius ≥ 2 m. If the onsite environment does not meet the required working conditions, ask a professional to assess the conditions.
	Only trained and qualified personnel are allowed to perform hoisting operations.
	Check that hoisting tools are complete and in good condition.
	Ensure that the hoisting tools are secured to a load-bearing object or wall.
	For outdoor use, you are advised to hoist the equipment on sunny days without wind.
	Ensure that the crane and steel hoisting ropes meet the requirements before the hoisting.

 Copyright © Huawei Digital Power Technologies Co., Ltd.

Stage	Precaution
	Ensure that all doors of the equipment are closed and locked.
	Ensure that the steel hoisting ropes are securely connected.
	It is recommended that the equipment be hoisted from left to right or from right to left.
During hoisting	Do not allow any unauthorized person to enter the hoisting areas and do not stand under the crane arm.
	Ensure that the crane is properly located and avoid long-distance hoisting.
	Keep the cabinet stable and horizontal during hoisting, and ensure that the diagonal gradient of the cabinet is less than or equal to 5 degrees.
	Ensure that the angle between two ropes is less than or equal to 90 degrees.
	Lift and land the cabinet slowly to prevent shock to equipment inside it.
	Remove the ropes after ensuring that the cabinet is placed evenly on the cabinet base.
	Do not drag steel ropes or lifting appliances. Protect the equipment from collision.
	Secure the cabinet you have hoisted before hoisting another cabinet.

6 Installation

6.1 Pre-installation Check

⚠ WARNING

Take protective measures for working at heights during unpacking.

NOTICE

- To prevent the equipment from falling over, secure it to a pallet truck or forklift using ropes before moving it. Move the equipment with caution to avoid bumping or falling, which may damage the equipment.
- After placing the equipment in the installation position, unpack it with care to prevent scratches. Keep the equipment stable during unpacking.
- If the installation environment is in poor condition, take dustproof and anti-condensation measures (for example, use a dust cover, plastic film, or fabric cloth) after unpacking batteries to prevent condensation and dust buildup, which may corrode the batteries.

Check Item	Criteria	Precaution
Checking the outer packaging before unpacking	Check whether the outer packaging is damaged, such as holes, cracks, or other signs of internal damage. If any damage is found, do not unpack the equipment. Contact your vendor as soon as possible.	You are advised to remove the outer packaging within 24 hours before installing the equipment.

 Copyright © Huawei Digital Power Technologies Co., Ltd.

Check Item	Criteria	Precaution
	Check the equipment model. If the equipment model is incorrect, do not unpack the equipment. Contact your vendor as soon as possible.	None
	Check whether there is a tilt indicator label on the outer packaging. If the tilt indicator turns red or any signs of water ingress and sealing damage are found, stop unpacking, check for causes immediately, and contact your vendor as soon as possible.	None
Checking deliverables after unpacking	Check whether the deliverables are complete, and whether there is any obvious external damage. If any item is missing or damaged, contact your vendor.	For details about the quantity of deliverables, see the *packing list* in the packing case.
Checking cables after unpacking	After unpacking, check whether the fastening components and removable components are loose. If they are loose, notify the carrier and manufacturer immediately.	None
	Check that the ground cables of the PACK, DCDC (supported only by some models), PCS, RCM, LTMS, and LCC are connected. If the ground cables are not connected, contact your vendor.	None
	Check whether the BAT+ and BAT– terminals on the RCM side are connected to cables, and whether the general power terminals on the PACK side are disconnected from the RCM. If the cables on the RCM side are not connected or the terminals on the PACK side are not disconnected, contact your vendor.	None

Check Item	Criteria	Precaution
	Check that all switches of the PACK, DCDC (supported only by some models), PCS, RCM, and LTMS are turned off. If the switches are not turned off, contact your vendor.	None
	Check whether the ground cables of the PACK, DCDC (supported only by some models), PCS, RCM, and LTMS are connected. If the cables are not connected, contact your vendor.	None

6.2 Preparing Tools

NOTE

- The tool pictures are for reference only.
- The tool tables may not list out some tools required onsite. Onsite installation personnel and the customer need to prepare the tools based on the site requirements.

Installation tool	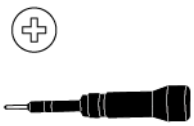 Phillips insulated torque screwdriver	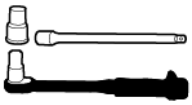 Insulated torque socket wrench (including an extension bar) • Socket specifications: 7–19 mm • Socket depth ≥ 50 mm • The socket connector matches the torque wrench. • Torque range: 1.2–47 N·m	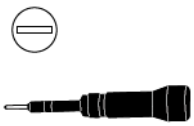 Flat-head insulated torque screwdriver	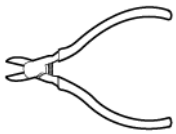 Diagonal pliers

	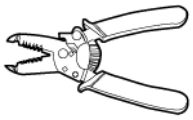 Wire stripper	 Cable cutter	 Rubber mallet	 Utility knife
	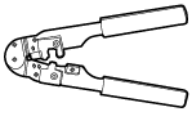 RJ45 crimping tool	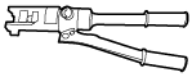 Hydraulic pliers	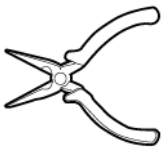 Needle-nose pliers	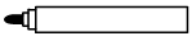 Marker
	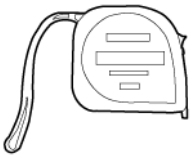 Steel measuring tape	 Level	 Multimeter DC voltage measurement range ≥ 1500 V DC	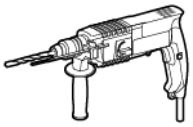 Hammer drill
	 Hammer drill bit Φ15 mm	 Heat shrink tubing	 Heat gun	 Cable tie

	 Insulated ladder (height ≥ 1.7 m)	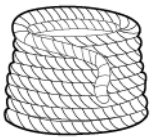 Lifting rope Rope length ≥ 2110 mm x 4	 Vacuum cleaner	 Powered industrial forklift (load-bearing capacity ≥ 4 t; recommended tyne dimensions: length ≥ 2000 mm, thickness 25–80 mm)
	 Crane (hoisting capacity ≥ 3 t; operating radius ≥ 2 m)	-	-	-
PPE	 Insulated gloves	 Protective gloves	 Goggles	 Dust mask
	 Insulated shoes	 Reflective vest	 Safety helmet	 Safety harness

6.3 Installing the ESS

WARNING

Do not remove a pallet from the ESS hoisted in the air. Ensure that the ESS is placed on the ground before removing the pallet.

NOTICE

- Properly keep the top cover of the outer packaging, as it will be used as the marking-off template to facilitate securing the ESS.
- The forklift positioning plates are used to limit the positions of the forklift tynes and prevent scratches on the ESS. The positioning plates can experience deformation and paint damage due to collision, and will be removed later.

NOTE

The ESS appearance may vary. The figures in this document are for reference only.

Step 1 Remove the top cover of the ESS outer packaging and keep it properly.

Step 2 Open the hook-and-loop fastener on the side, remove the outer packing of the ESS, and remove the paper transportation guide from the side of the ESS.

Figure 6-1 Removing outer packaging

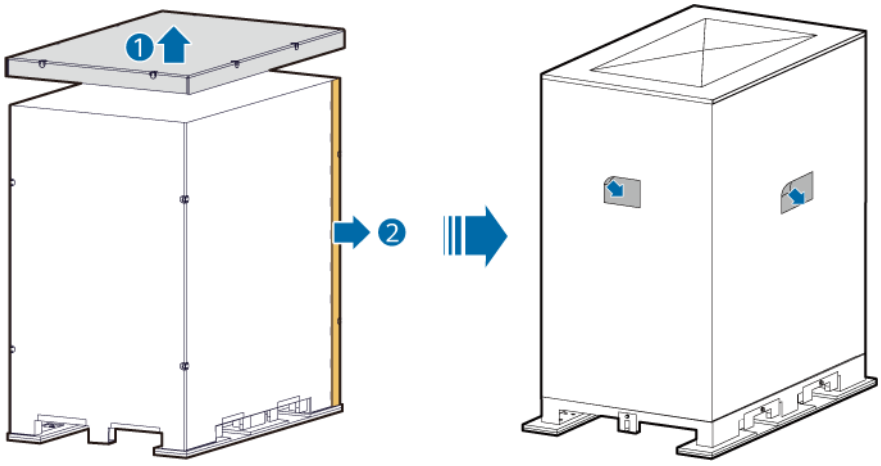

Step 3 Remove the bottom pallets.

NOTE

Due to space limitations, remove the forklift positioning plates before removing the two screws in the middle of the bottom pallets. If a forklift is required for transportation, reinstall the forklift positioning plates after removing the pallets.

 Copyright © Huawei Digital Power Technologies Co., Ltd.

Figure 6-2 Removing pallets

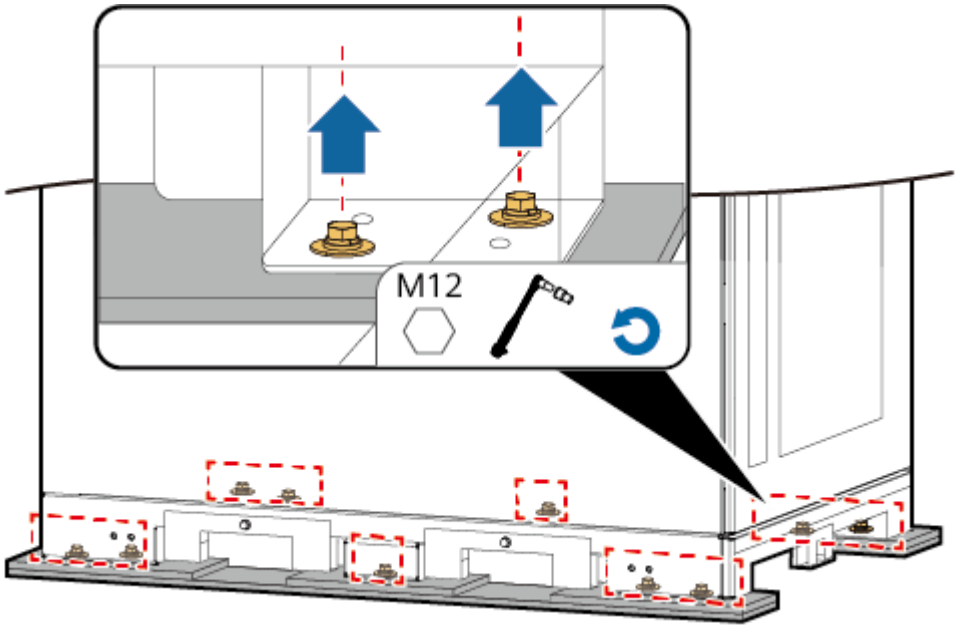

Step 4 Remove the forklift positioning plates.

NOTICE

If a forklift is used to move the ESS, the positioning plates on the side from which the tynes are inserted must be removed after the ESS is secured.

Figure 6-3 Removing forklift positioning plates

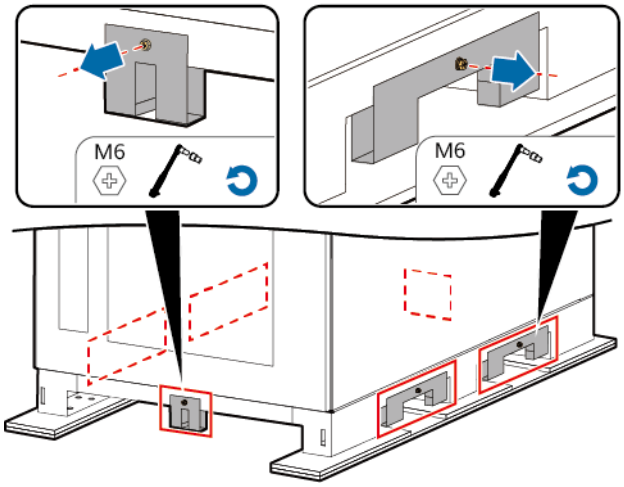

Step 5 Keep the cabinet door closed and move the ESS to the specified position.

 Copyright © Huawei Digital Power Technologies Co., Ltd.

Figure 6-4 Moving the ESS (method 1: using bridle slings)

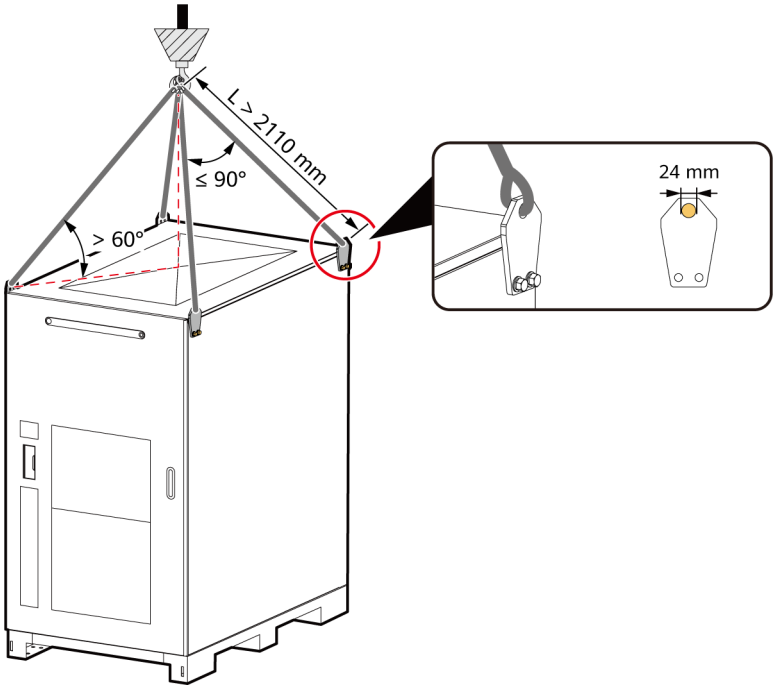

NOTICE

- Crane hoisting capacity ≥ 3 t; operating radius ≥ 2 m.
- Forklift load-bearing capacity ≥ 4 t; recommended tyne dimensions: length ≥ 2000 mm, thickness 25–80 mm.
- The lifting capacity of slings shall be greater than three times the maximum weight of the cabinet.

 Copyright © Huawei Digital Power Technologies Co., Ltd.

Figure 6-5 Moving the ESS (method 2: using a forklift)

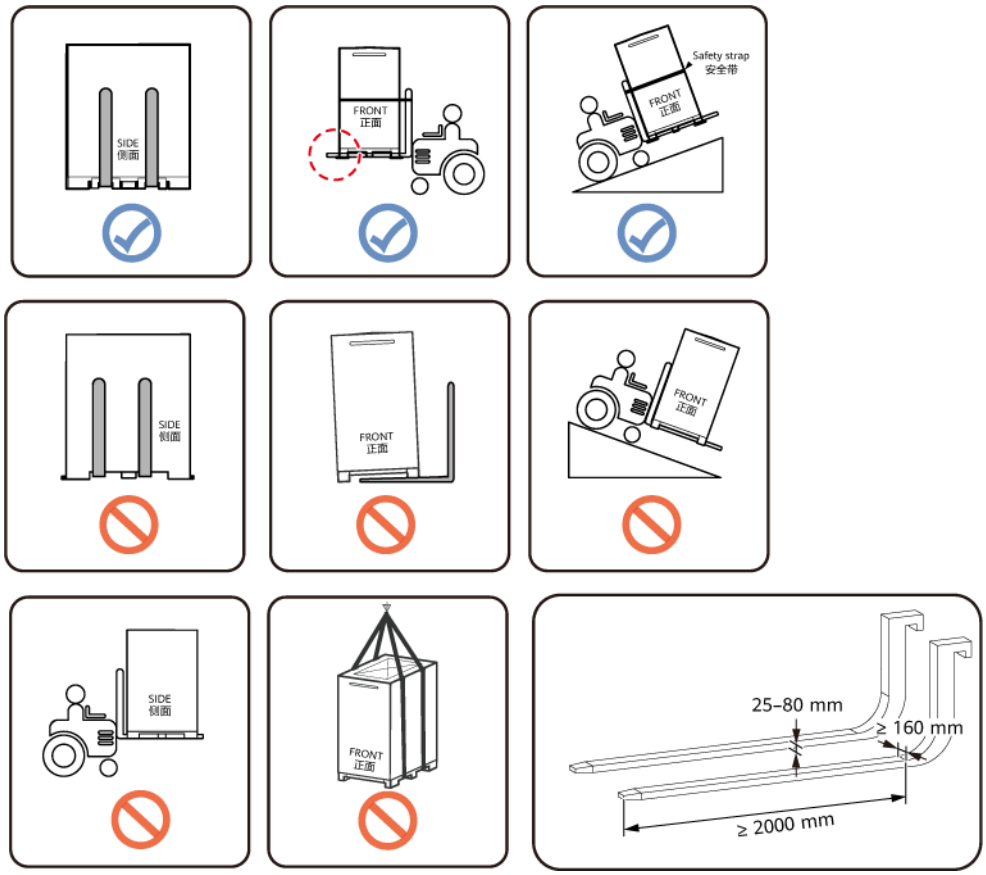

WARNING

When a forklift is used, bind and secure the ESS based on the site requirements to ensure there is no risk of falling.

WARNING

- Do not use a manual pallet truck to move the cabinet on a slope.
- Only a powered industrial forklift can be used to move the cabinet on a slope. The forklift must have sufficient power and its center of gravity must be stable to ensure safety during transportation on a slope.
- The forklift tynes must be in the middle of the ESS and must extend out of the cabinet.

Step 6 Remove the remaining forklift positioning plates (if any) from the ESS using an M6 insulated torque socket wrench.

Step 7 Secure the ESS: You are advised to secure the ESS using anchor brackets. The ESS can also be secured using hidden screws.

 Copyright © Huawei Digital Power Technologies Co., Ltd.

WARNING

Ensure that anchor brackets (delivered with the product) are correctly installed and secured using screws to prevent the cabinet from falling down and being damaged in extreme conditions such as earthquakes.

CAUTION

If the space at the rear of the ESS is insufficient for drilling holes on the ground, use method 2 to secure the ESS. For details, see **Figure 6-7**.

NOTICE

- If the ESS is not positioned stably, use a spacer (delivered with the product) to level the ESS before securing it.
- When you use a marking-off template for installing screws to secure the ESS, partially secure the template with a screw after drilling a hole and then continue to drill the next hole to prevent the template from moving during drilling holes.
- After removing the eight screws that secure hoisting brackets, keep them properly for future use when installing anchor brackets.

- Method 1: Secure the ESS using four anchor brackets (recommended). Each of the four anchor brackets can be secured to the foundation using one expansion bolt.
  a. Secure anchor brackets using flat brackets and screws.
  b. Mark the hole positions using a marker.
  c. Drill to the specified depth using a hammer drill, and clean any debris from the holes.
  d. Remove the nuts and washers from the expansion bolts.
  e. Gently hammer the expansion bolts into the holes.
  f. Tighten the nuts and washers.

 Copyright © Huawei Digital Power Technologies Co., Ltd.

Figure 6-6 Securing the ESS using four anchor brackets

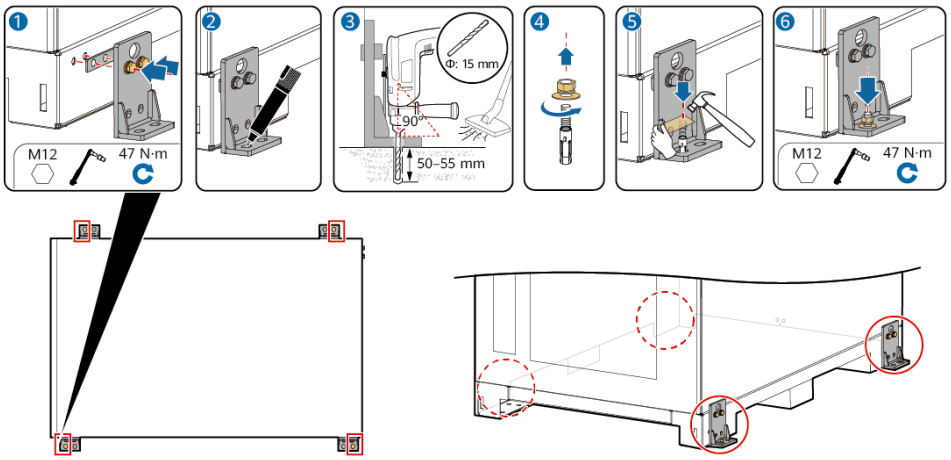

- Method 2: Secure the ESS using three anchor brackets. Each of the three anchor brackets can be secured to the foundation using one expansion bolt.
  a. Mark the hole positions **a** and **b** using a marker and the top cover of the cardboard packaging with the positioning silk screen. Drill to the specified depth using a hammer drill, and clean any debris from the holes.
  b. Gently hammer the expansion bolts into the holes, and remove the nuts and washers from the expansion bolts.
  c. Secure anchor brackets using flat brackets and screws.
  d. Insert the expansion bolts through the mounting holes of the anchor brackets, and tighten the nuts and washers.
  e. Mark the third hole position using a marker, and install the third anchor bracket and expansion bolt.

 Copyright © Huawei Digital Power Technologies Co., Ltd.

Figure 6-7 Securing the ESS using three anchor brackets

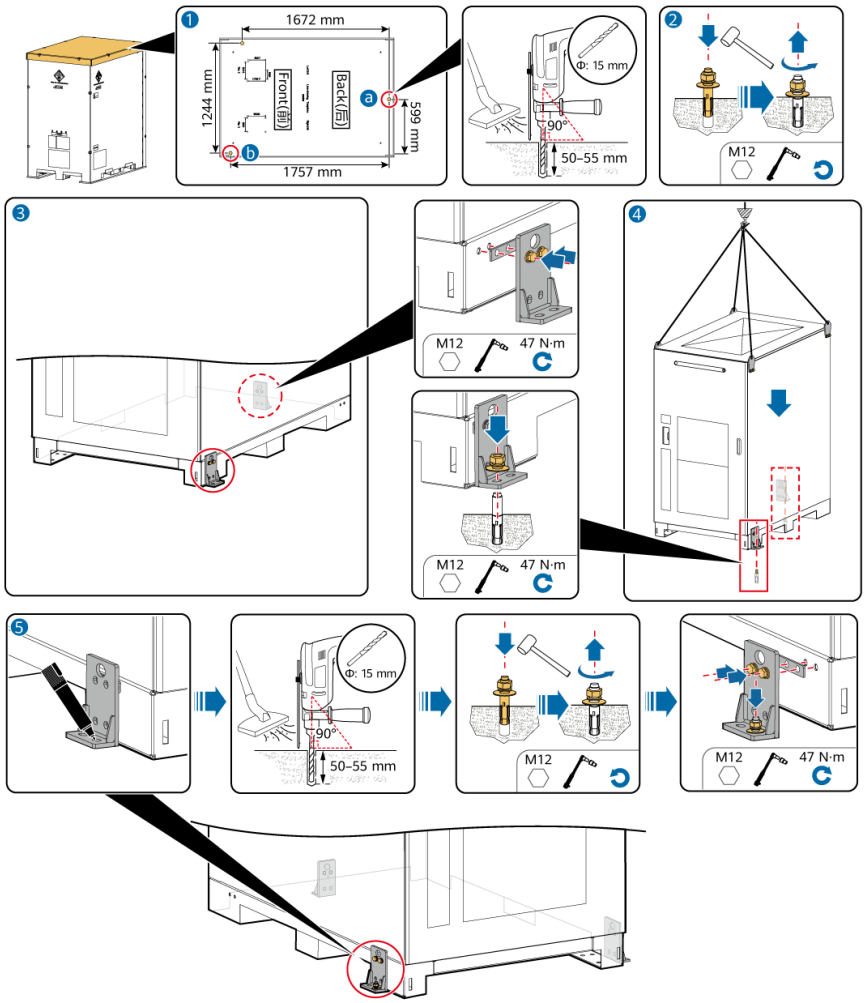

- Method 3: Secure the ESS using hidden bolts. Each of the four mounting holes is secured to the foundation using only one expansion bolt.
  a. Mark the four hole positions using a marker and the top cover of the cardboard packaging with the positioning silk screen. Drill to the specified depth using a hammer drill, and clean any debris from the holes.
  b. Gently hammer the expansion bolts into the holes, and remove the nuts and washers from the expansion bolts.
  c. Hoist the ESS to the specified position.
  d. Insert the expansion bolts through the mounting holes of the ESS, and tighten the nuts and washers.

 Copyright © Huawei Digital Power Technologies Co., Ltd.

Figure 6-8 Securing the ESS using hidden bolts

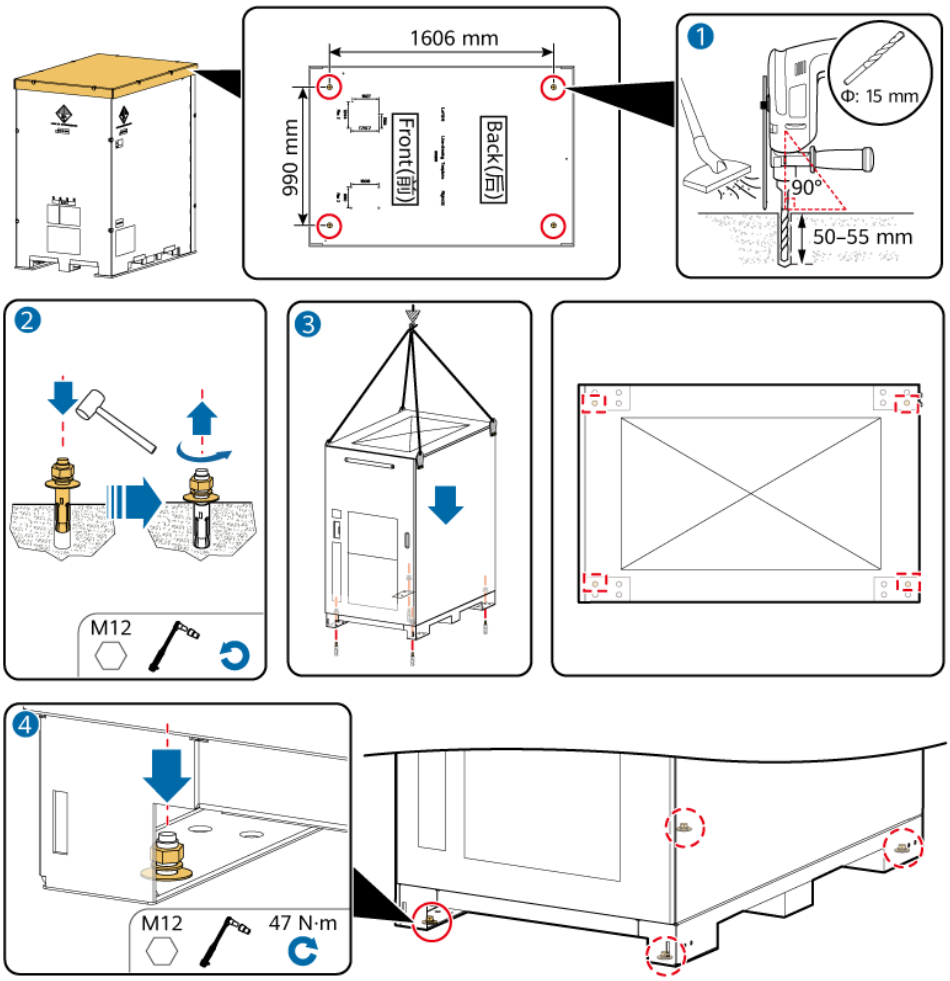

Step 8 Remove the hoisting brackets, and use the waterproof rubber plugs (delivered with the product) to seal the bracket installation holes.

 Copyright © Huawei Digital Power Technologies Co., Ltd.

Figure 6-9 Removing the hoisting brackets

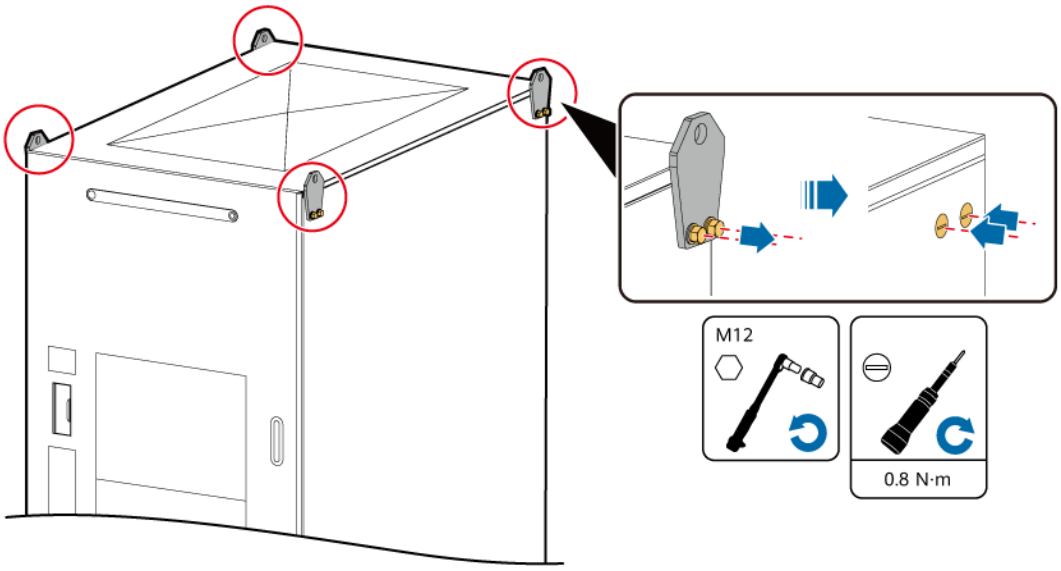

----End

6.4 Installing Ground Cables

Preparing Cables

Step 1 Prepare cables.

Location	Scenario	Type	Recommended Specifications	Terminal	Remarks
Outside the cabinet	Ground bar	Hot-dip zinc-coated flat steel sheet	Recommended: ≥ 40 mm x 4 mm (depending on the onsite fault current); prepared by the customer		Use either of the two grounding methods.
	Ground cable	Single-core outdoor copper cable	Cross-sectional area: 25–50 mm^2	M12 OT/DT terminal, prepared by the customer	
Inside the cabinet	Entire ESS	Single-core outdoor copper cable	Cross-sectional area: 25–50 mm^2	M6 OT/DT terminal, prepared by the customer	-

 Copyright © Huawei Digital Power Technologies Co., Ltd.

Step 2 For details about how to crimp OT/DT terminals, see **B Crimping an OT or DT Terminal**.

----End

Procedure

Step 1 Install the ground bar or ground cable outside the cabinet and connect it to the customer's ground grid.

Figure 6-10 Grounding outside the cabinet (flat ground bar)

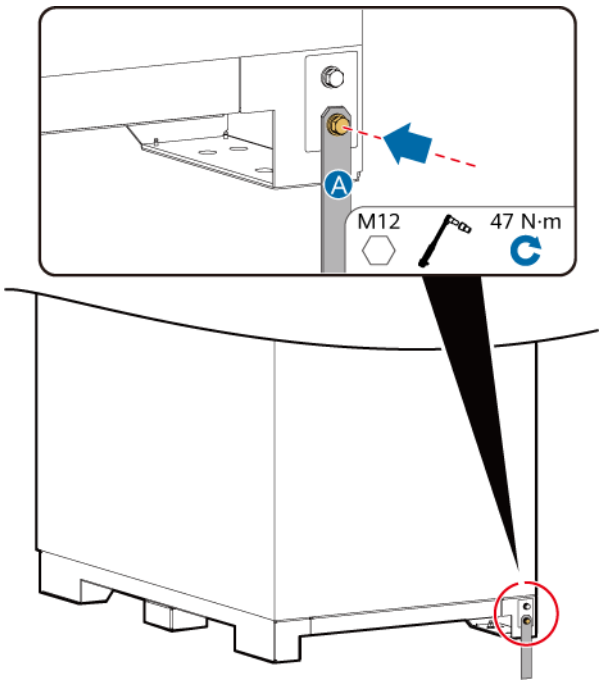

Figure 6-11 Grounding outside the cabinet (ground cable)

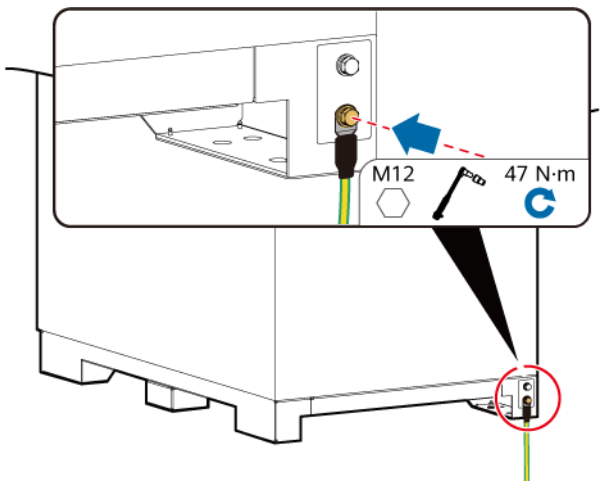

----End

 Copyright © Huawei Digital Power Technologies Co., Ltd.

7 Installing Cables

DANGER

Ensure that cables are connected in correct polarities. Do not short-circuit the positive and negative terminals of a battery string, and do not short-circuit a battery pack and the RCM. Otherwise, a short circuit fault will occur.

DANGER

- Do not smoke or have an open flame around batteries.
- The site must be equipped with qualified fire fighting facilities, such as fire sand and carbon dioxide fire extinguishers.
- Wear personal protective equipment and use dedicated insulated tools to avoid electric shocks or short circuits.

WARNING

- Tighten the screws on copper bars or cables to the torque specified in this document. Periodically confirm whether the screws are tightened, check for rust, corrosion, or other foreign objects, and clean them up if any. Loose screw connections will result in excessive voltage drops and batteries may catch fire when the current is high.

NOTICE

- After cables are connected, do not remove the desiccants before power-on.

 Copyright © Huawei Digital Power Technologies Co., Ltd.

CAUTION

- When connecting cables to batteries, ensure that terminals are securely connected and cables are intact.
- Do not connect two or more cables to the positive or negative power port of a battery in parallel.
- Stay away from the equipment when preparing cables to prevent cable scraps from entering the equipment. Cable scraps may cause sparks and result in personal injury and equipment damage.

NOTE

The cable colors shown in the electrical connection diagrams provided in this section are for reference only. Select cables in accordance with local cable specifications. (Green-and-yellow cables are only used for protective earthing.)

7.1 Preparing Cables

NOTE

The cable diameter must comply with local cable standards. The factors that affect cable selection include the rated current, cable type, routing mode, ambient temperature, and maximum expected line loss.

Step 1 Prepare cables.

Cable	Type	Recommended Cross-Sectional Area/Outer Diameter	Terminal	Source	Description
PCS AC power cable	Four-core/ Five-core outdoor copper cable	Cross-sectional area: 50–300 mm^2	M12 OT/DT terminal	Prepared by the customer	-
	Four-core/ Five-core outdoor aluminum alloy/ copper-clad aluminum cable	Cross-sectional area: 70–300 mm^2			

 Copyright © Huawei Digital Power Technologies Co., Ltd.

Cable	Type	Recommended Cross-Sectional Area/Outer Diameter	Terminal	Source	Description
Auxiliary power supply cable (power supply connected from outside the cabinet)	Two-core/ Three-core outdoor copper cable	Cross-sectional area: 6–25 mm^2	M6 OT/DT terminal	Prepared by the customer	The auxiliary power supply can be obtained in the following methods: • Power supply connected from outside the cabinet (recommended) • Power supply connected to the PCS terminal inside the cabinet (this may cause unbalanced output power)
	Two-core/ Three-core outdoor aluminum alloy/ copper-clad aluminum cable	Cross-sectional area: 9–25 mm^2			
Auxiliary power supply cable (power supply connected to the PCS terminal inside the cabinet)	Copper cable	Cross-sectional area: 5.26 mm^2	• The M6 OT terminal end is connected to the RCM. • The M4 OT terminal end is connected to the PCS.	Delivered with the product	
UPS AC input power cable	Two-core/ Three-core outdoor copper cable	Cross-sectional area: 6–25 mm^2	M6 OT/DT terminal	Prepared by the customer	-

Cable	Type	Recommended Cross-Sectional Area/Outer Diameter	Terminal	Source	Description
	Two-core/ Three-core outdoor aluminum alloy/ copper-clad aluminum cable	Cross-sectional area: 9–25 mm^2			
Network cable	CAT 5E outdoor shielded network cable, internal resistance ≤ 1.5 ohms/10 m	≤ 9 mm	Shielded RJ45 connector	Delivered with the product	-
Optical fiber cable	Four-core or eight-core single-mode armored cable with a transmission wavelength of 1310 nm	≤ 18 mm	-	Prepared by the customer	-

Step 2 For details about how to crimp OT/DT terminals, see **B Crimping an OT or DT Terminal**.

----End

7.2 Installing PCS AC Power Cables

⚠ CAUTION

- Before connecting the PCS AC power cables, ensure that the PCS is not connected to any power supply (including the auxiliary power supply) and the LED indicator of the PCS is off.
- When connecting the PCS AC power cables, ensure that the cables are not damaged or disconnected. If the earthing system is TN-S, TN-C, TN-C-S, or TT, ensure that the neutral wire is securely connected. Otherwise, AC electrical equipment in the system may be damaged. For details, see **2.7 Earthing Systems**.
- Connect cables in the A, B, and C phase sequence for the PCS, power distribution cabinet, and transformer.

NOTICE

- The screw assembly whose model is subject to the delivery shall be tightened according to the corresponding standard torque.
- Partially tighten the nuts of the PCS AC power cables to a torque of 5 N·m.
- The wiring terminal shall be installed with heat shrink tubing at the crimping area of the cable conductor to ensure that the electrical clearance between the conductors is greater than 20 mm.
- Lay out the PCS AC power cables according to the design, route the cable to the wiring positions on the corresponding switches, and label the cables.
- After connecting the PCS AC power cables, ensure that the OT/DT terminals are properly fitted to and aligned with the copper bar, and that the PCS AC power cables point vertically downward.
- Use a socket with a depth greater than or equal to 50 mm for securing the M12 nuts of the PCS AC power cables.

NOTICE

1. Preinstall bolts according to the recommended torque of 47 N·m.
2. Verify that the torque of the installed bolts is 47 N·m using a torque socket wrench.
3. Mark the nuts whose torque has been verified using a marker.

Step 1 Remove the baffle plate from the bottom of the ESS.

Step 2 Connect the PCS AC power cables: Route the mains cables through the cable holes at the bottom, and connect the cables to the PCS and ground bar. Select a cable connection method as required.

 Copyright © Huawei Digital Power Technologies Co., Ltd.

CAUTION

- After the PCS AC power cables are routed through the cable holes, immediately connect the cables to the PCS terminals to prevent the cables from interfering with other components in the cabinet, and then seal the cable holes.

Figure 7-1 Installing PCS AC power cables

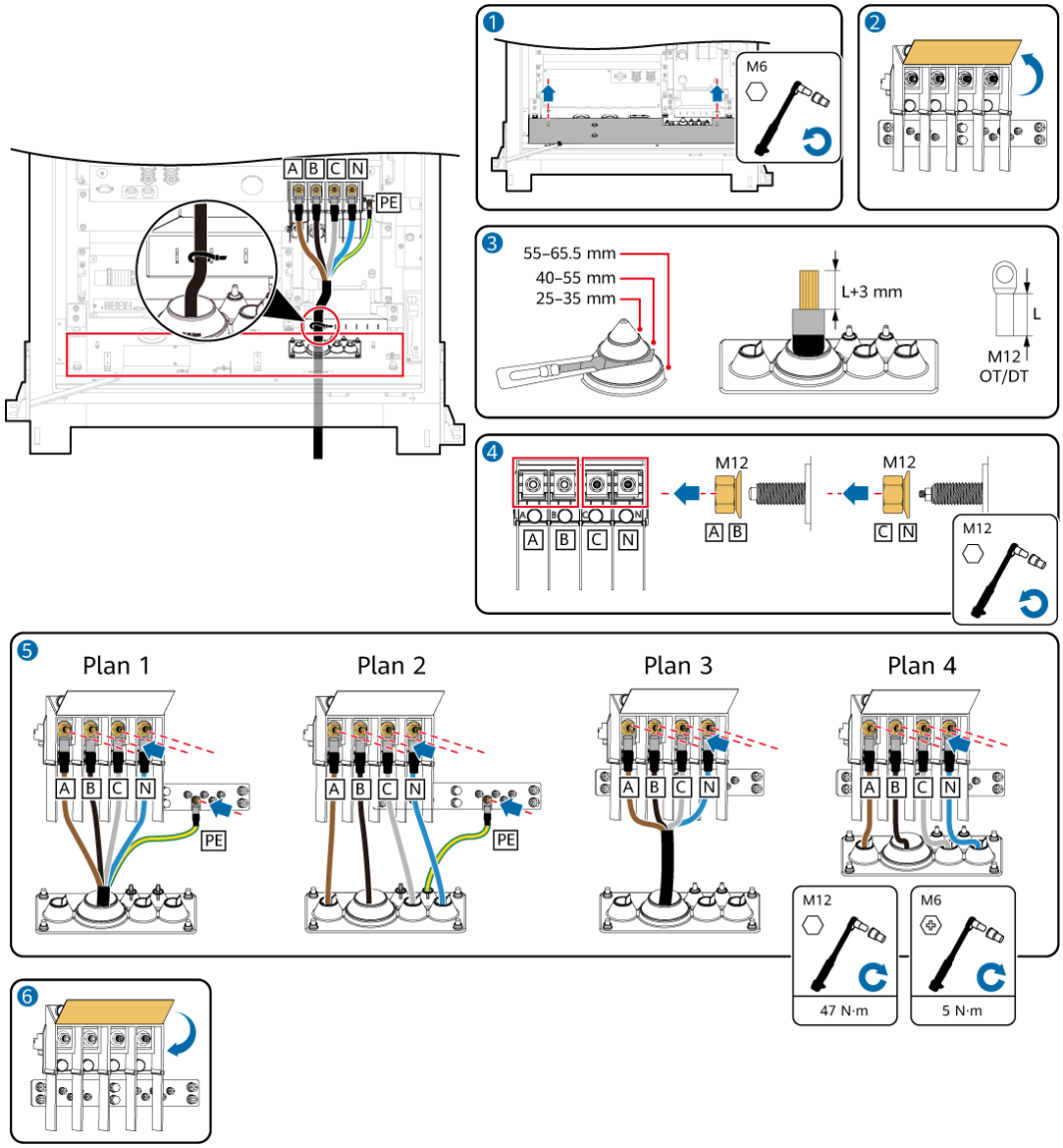

----End

7.3 Installing the Auxiliary Power Supply Cable

The ESS auxiliary power supply can be a power supply connected from outside the cabinet or a power supply connected to the PCS terminal inside the cabinet.

 Copyright © Huawei Digital Power Technologies Co., Ltd.

NOTICE

- When the rated grid voltage is less than or equal to 415 V, the ESS auxiliary power supply can be a power supply connected from outside the cabinet or a power supply connected to the PCS terminal inside the cabinet. When the auxiliary power supply is connected to the PCS terminal inside the cabinet, if the general power distribution switch on the customer side is turned off, the ESS auxiliary power supply will be disconnected.
- When the rated grid voltage is greater than 415 V, the ESS auxiliary power supply must be a power supply connected from outside the cabinet.
- Obtain the AC auxiliary power from the mains or a reliable power supply. Do not directly obtain power from the AC side of renewable energy inverters such as PV inverters and wind power converters.

Step 1 Remove the RCM panel.

Step 2 Remove the MAINS AC input terminal cover.

Step 3 Connect the auxiliary power supply cable:

- When the auxiliary power supply is connected from outside the cabinet, route the AC power cable through the cable hole at the bottom and connect the cable to the MAINS AC input terminal. The ESS is connected to an external power distribution cabinet.
- When the auxiliary power supply is connected to the PCS terminal inside the cabinet, connect the M6 OT terminal to the MAINS AC input terminal and the M4 OT terminal to the PCS.

Figure 7-2 Connecting the auxiliary power supply cable (power supply connected from outside the cabinet)

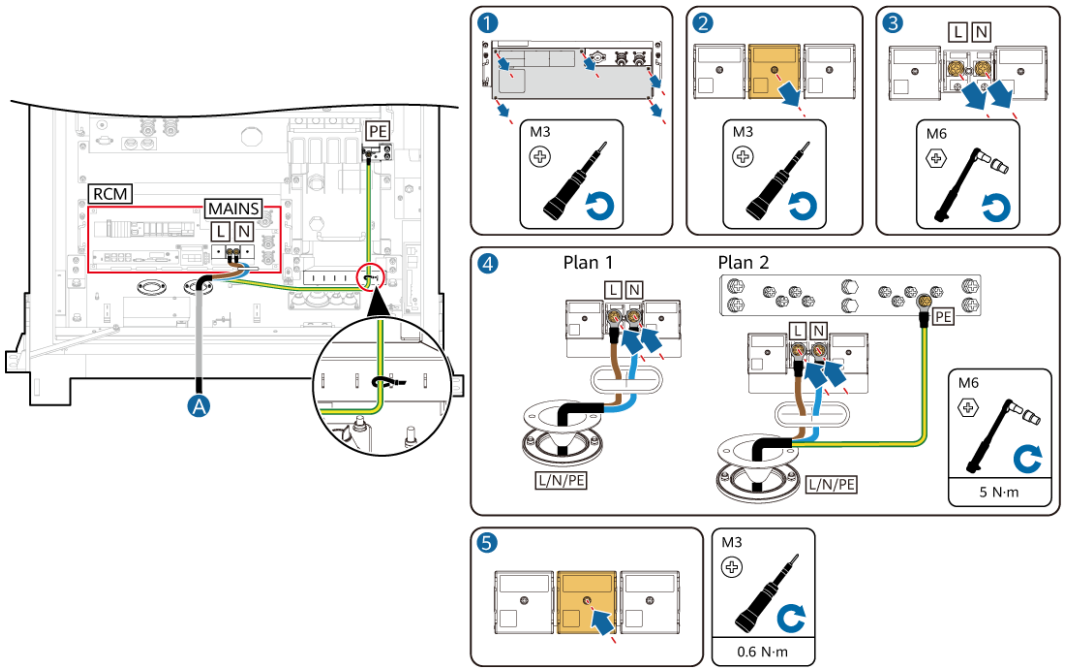

Figure 7-3 Connecting the auxiliary power supply cable (power supply connected to the PCS terminal inside the cabinet)

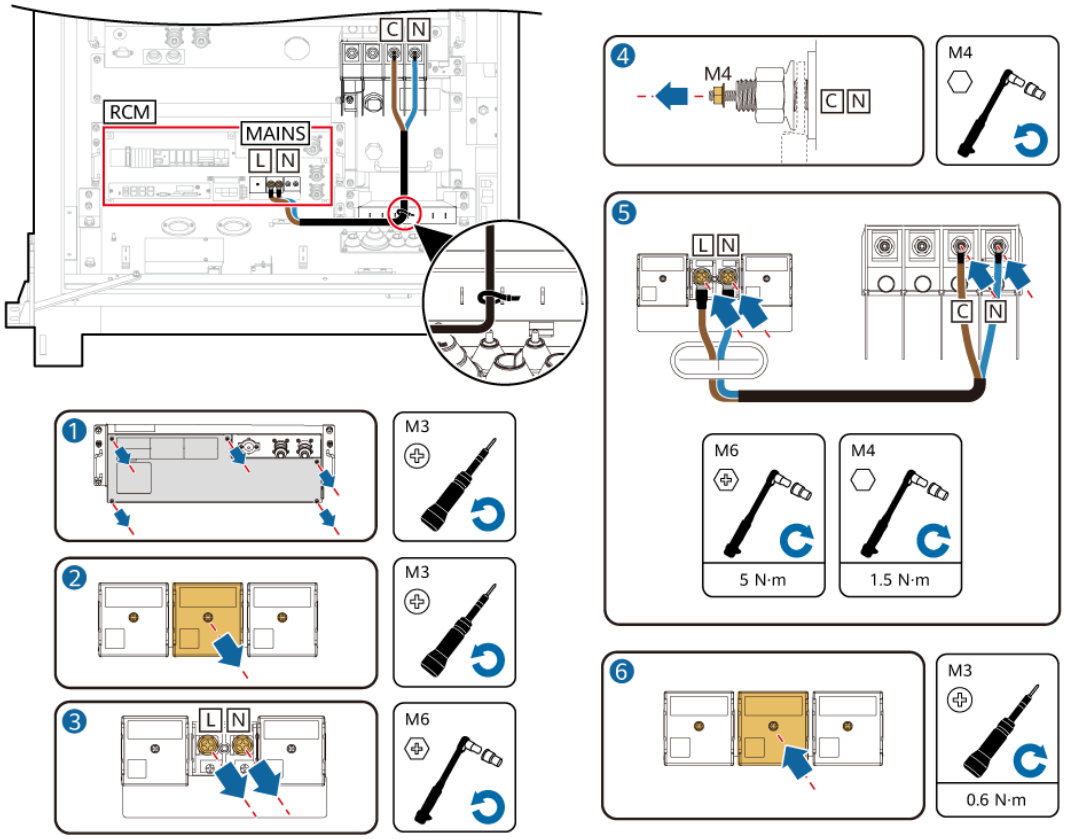

Step 4 Reinstall the MAINS AC input terminal cover.

----End

7.4 (Optional) Installing UPS AC Input Power Cables

NOTICE

- If a UPS is configured, perform the following steps to connect the UPS AC input power cables.
- Obtain the AC auxiliary power from the mains or a reliable power supply. Do not directly obtain power from the AC side of renewable energy inverters such as PV inverters and wind power converters.

Step 1 Remove the jumper bar from 2–3 and insert it to 1–2, and remove the jumper bar from 5–6 and insert it to 4–5 on the XT terminal.

Step 2 Route the UPS AC input power cables through the cable hole and connect the cables to the UPS wiring terminals.

 Copyright © Huawei Digital Power Technologies Co., Ltd.

Figure 7-4 Connecting UPS cables

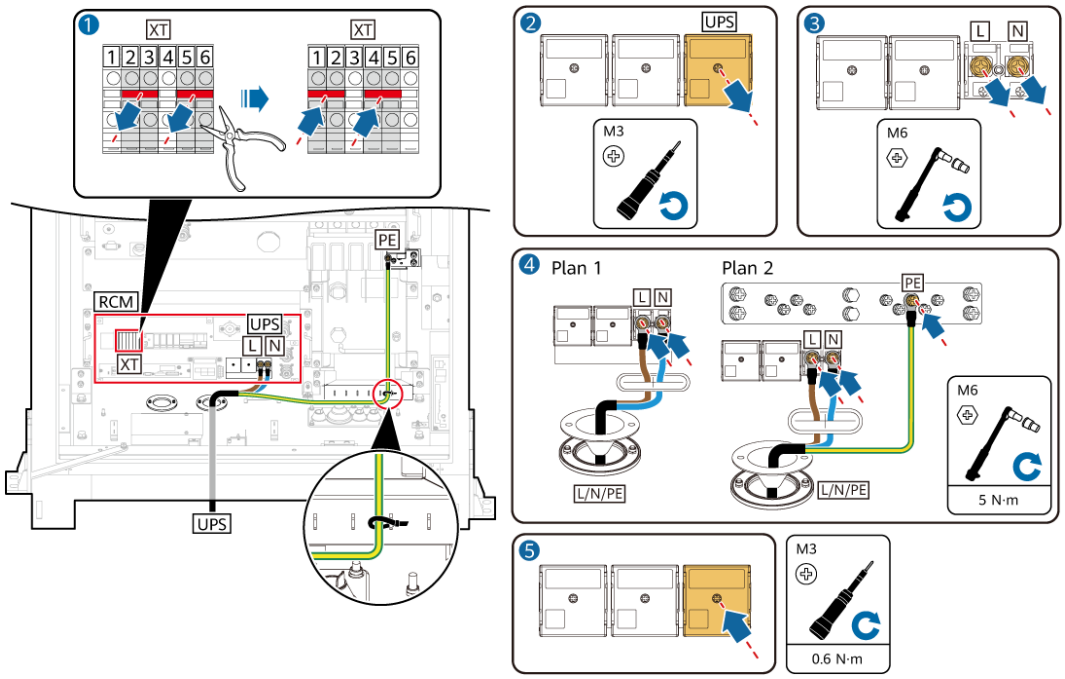

----End

7.5 Installing Communications Cables

7.5.1 Installing an FE Communications Cable

NOTE

- If the SmartLogger is installed inside the ESS, install it and connect cables by referring to **7.6 (Optional) Installing the SmartLogger**.
- If the SmartLogger is installed outside the ESS, install it and connect cables by referring to **SmartLogger3000 Quick Guide**, **SmartLogger5000 Quick Guide**, or **SmartMGC5000 Quick Guide** based on the model.

Step 1 Connect the FE communications cable to the **WAN1/LAN1** or **WAN2/LAN2** port of the RCM.

 Copyright © Huawei Digital Power Technologies Co., Ltd.

Figure 7-5 Connecting communications cables (for the SmartLogger installed in the ESS)

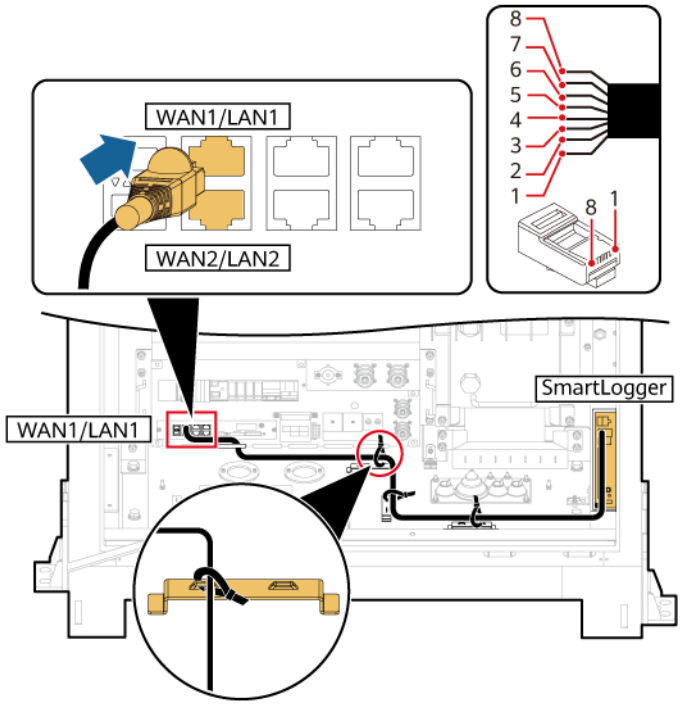

Figure 7-6 Connecting communications cables (for the SmartLogger installed outside the ESS)

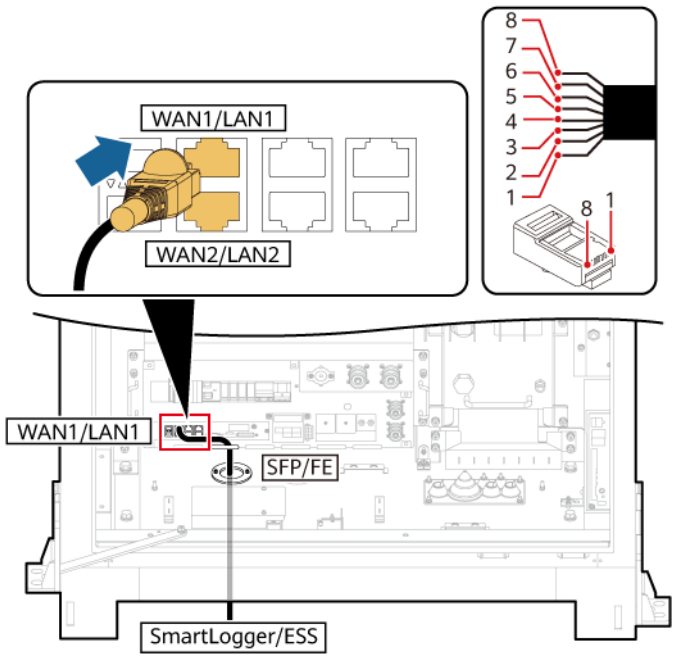

(1) White-and-orange	(2) Orange	(3) White-and-green	(4) Blue

 Copyright © Huawei Digital Power Technologies Co., Ltd.

(5) White-and-blue	(6) Green	(7) White-and-brown	(8) Brown

Step 2 Bind the cable.

----End

7.5.2 Installing Optical Fiber Communications Cables

NOTICE

Only professionals are allowed to connect optical fiber cables and splice fibers.

NOTE

In the optical fiber ring topology, two optical fiber cables are required.

Context

Figure 7-7 Access terminal box (ATB) interior

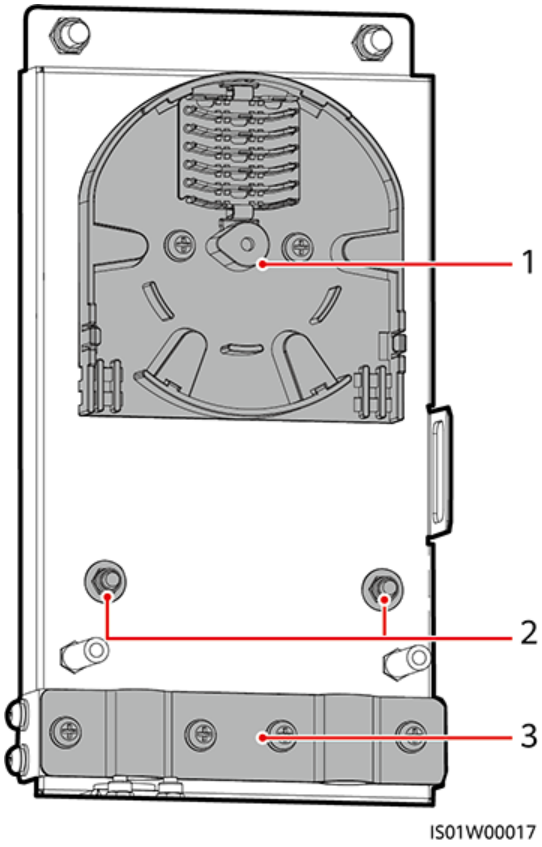

(1) Fiber spool

(2) Fixing points for internal steel wires of optical fiber cables

(3) Cable clip

 Copyright © Huawei Digital Power Technologies Co., Ltd.

Installation Preparations

- Optical module: ordered from the Company or purchased by yourself. Choose 100M or 1000M optical modules based on the peer port of the optical switch. SFP or eSFP optical modules shall be used. The transmission distance supported by the 100M optical modules is ≤ 15 km, and the transmission distance supported by the 1000M optical modules is ≤ 10 km.
- Optical jumper: Purchase the auxiliary material package.
- Adapter: Purchase the auxiliary material package.

Procedure

Step 1 Open the ESS bottom sealing plate and remove the external mechanical parts of the ATB.

Step 2 Remove the optical fiber cable fastener.

Step 3 Connect one end of the optical jumper to the fiber adapter.

Step 4 Route the other end of the optical jumper through the cable hole on the side of the ATB, and connect the cable to the ATB.

Step 5 Connect the peripheral optical fiber cable to the ATB, splice the optical fiber cable and the optical jumper, and then wind the spliced cable around the fiber spool on the ATB.

Step 6 Check that the cables are connected correctly and securely. Then reinstall the optical fiber cable fastener and external mechanical parts.

Figure 7-8 Connecting optical fiber communications cables

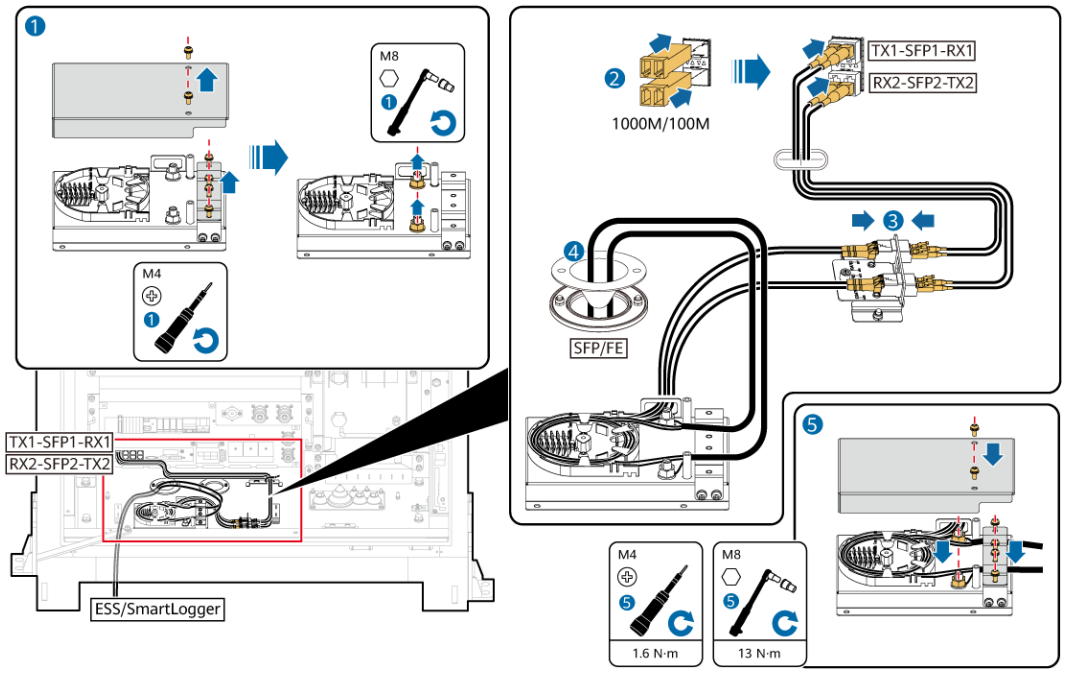

----End

 Copyright © Huawei Digital Power Technologies Co., Ltd.

7.6 (Optional) Installing the SmartLogger

Context

In the single-cabinet scenario, the SmartLogger can be installed inside the ESS.

This section describes how to connect cables when the SmartLogger is installed in the ESS.

Installation Preparations

Tool	Obtaining Method
SmartLogger	Delivered separately from the ESS
SIM card	Standard SIM card; prepared by the customer • Size: 25 mm x 15 mm • Capacity ≥ 64 KB • The monthly data package of the SIM card shall meet the requirement.[1]
SmartLogger input power cable	Delivered with the ESS; used only when the SmartLogger is installed inside the ESS
Network cable	Delivered with the ESS
4G antenna	Optional
Note [1]: • The monthly data package of the SIM card is calculated based on the actual connected devices: Monthly data package of the SIM card ≥ Monthly data of the ESSs + Monthly data of the inverters + Monthly data of the EMIs + Monthly data of the optimizers + Monthly data of the power meters. If other devices are connected to the SmartLogger in the network, the monthly data package of the SIM card needs to be increased as required. • Recommended monthly data package of the SIM card for the ESS: 80 MB + 100 MB x ESS quantity	

NOTICE

- There are two installation methods: Plan 1 and Plan 2. Select an installation method based on the actual installation position of the SmartLogger in the cabinet.
- If the SmartLogger model is SmartMGC5000B or SmartLogger5000B, use Plan 1.

 Copyright © Huawei Digital Power Technologies Co., Ltd.

Plan 1

Step 1 Remove the mounting ears of the SmartLogger.

Step 2 Install the SIM card of the SmartLogger.

Step 3 Remove the transparent protective cover from the SmartLogger.

Step 4 Install the SmartLogger and secure the clamps at the rear of the SmartLogger into the preinstalled guide rail in the cabinet.

Step 5 Connect the SmartLogger power cable.

Figure 7-9 SmartLogger cable connection 1

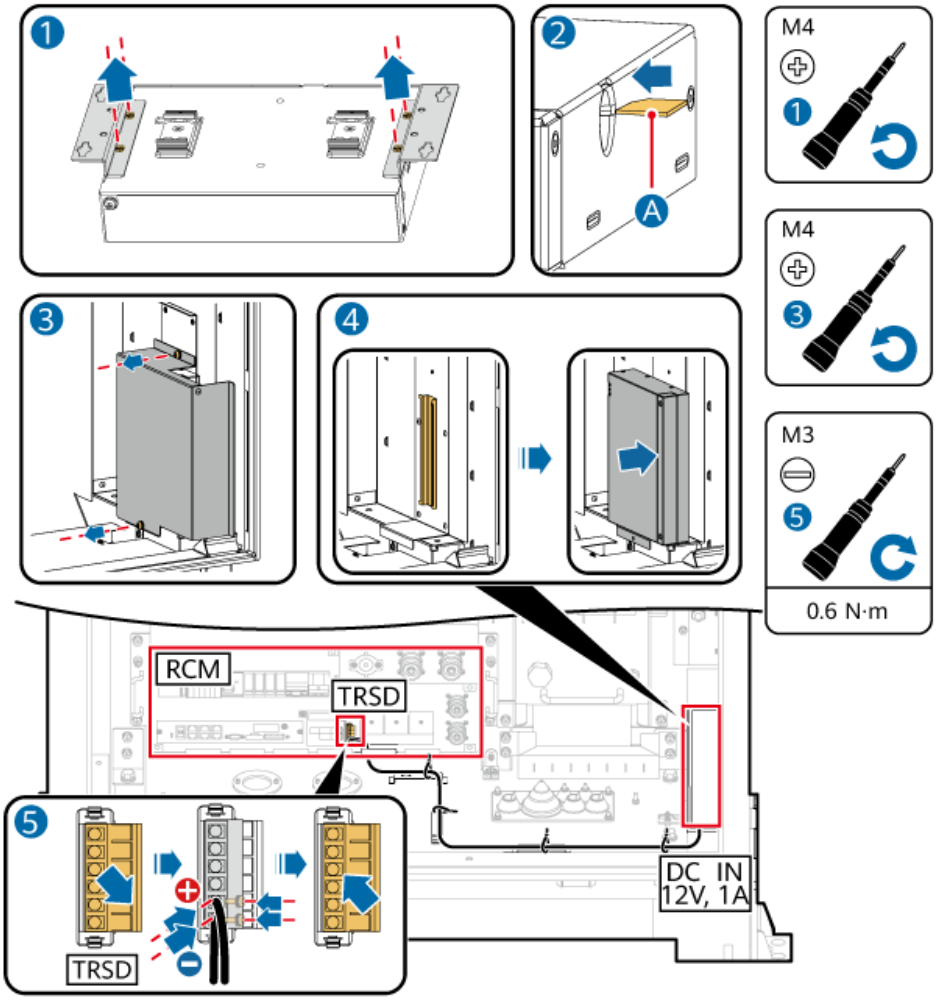

Step 6 Connect the 4G antenna: Install the 4G antenna at the rear of the cabinet top, route the cable through the cable hole at the bottom of the cabinet, and connect the cable to the 4G antenna port. Bind the cable inside the cabinet and secure the cable outside the cabinet using adhesive cable ties.

NOTICE

Route a communications cable outside the cabinet through a protective pipe, such as a PVC corrugated pipe, and secure the pipe to the side of the cabinet.

 Copyright © Huawei Digital Power Technologies Co., Ltd.

Step 7 Install the external protective cover for the SmartLogger.

Figure 7-10 SmartLogger cable connection 2

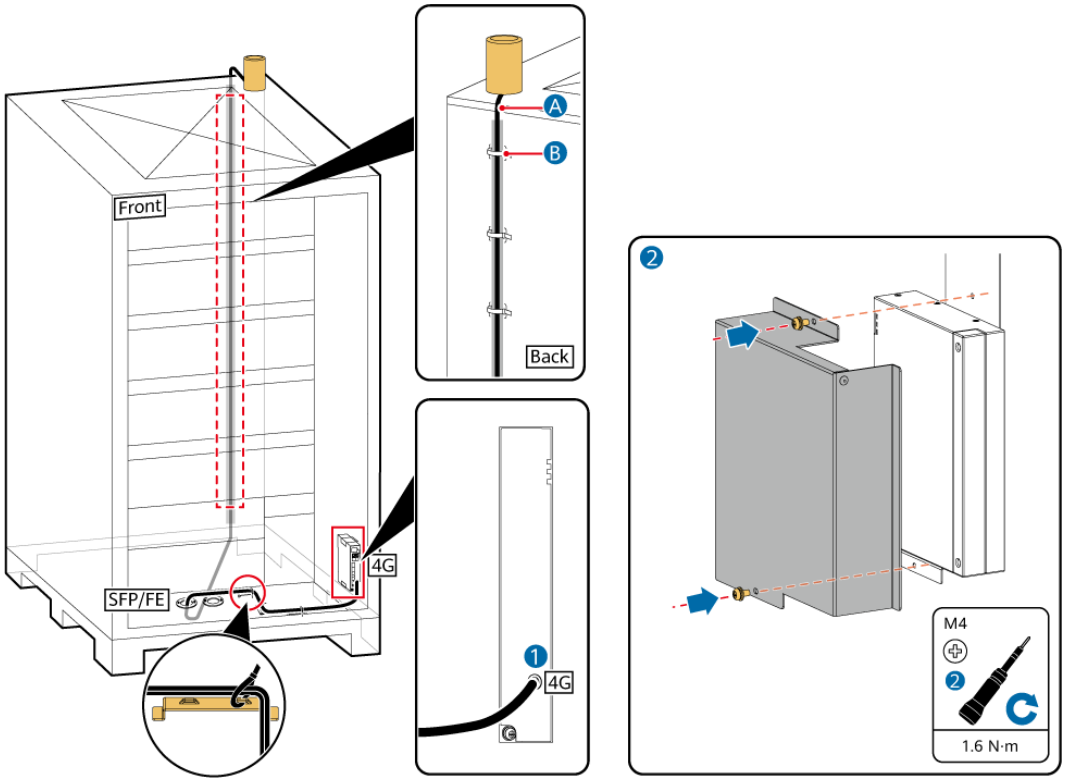

A: 4G antenna (optional)	B: Adhesive cable ties (prepared by the customer)

----End

Plan 2

Step 1 Remove the mounting ears and guide rail clamps from the SmartLogger.

Step 2 Install the SIM card of the SmartLogger.

Step 3 Remove the transparent protective cover from the SmartLogger.

Step 4 Install the SmartLogger and push it into the preinstalled mounting bracket in the ESS.

Step 5 Connect the SmartLogger power cable.

 Copyright © Huawei Digital Power Technologies Co., Ltd.

Figure 7-11 SmartLogger cable connection 1

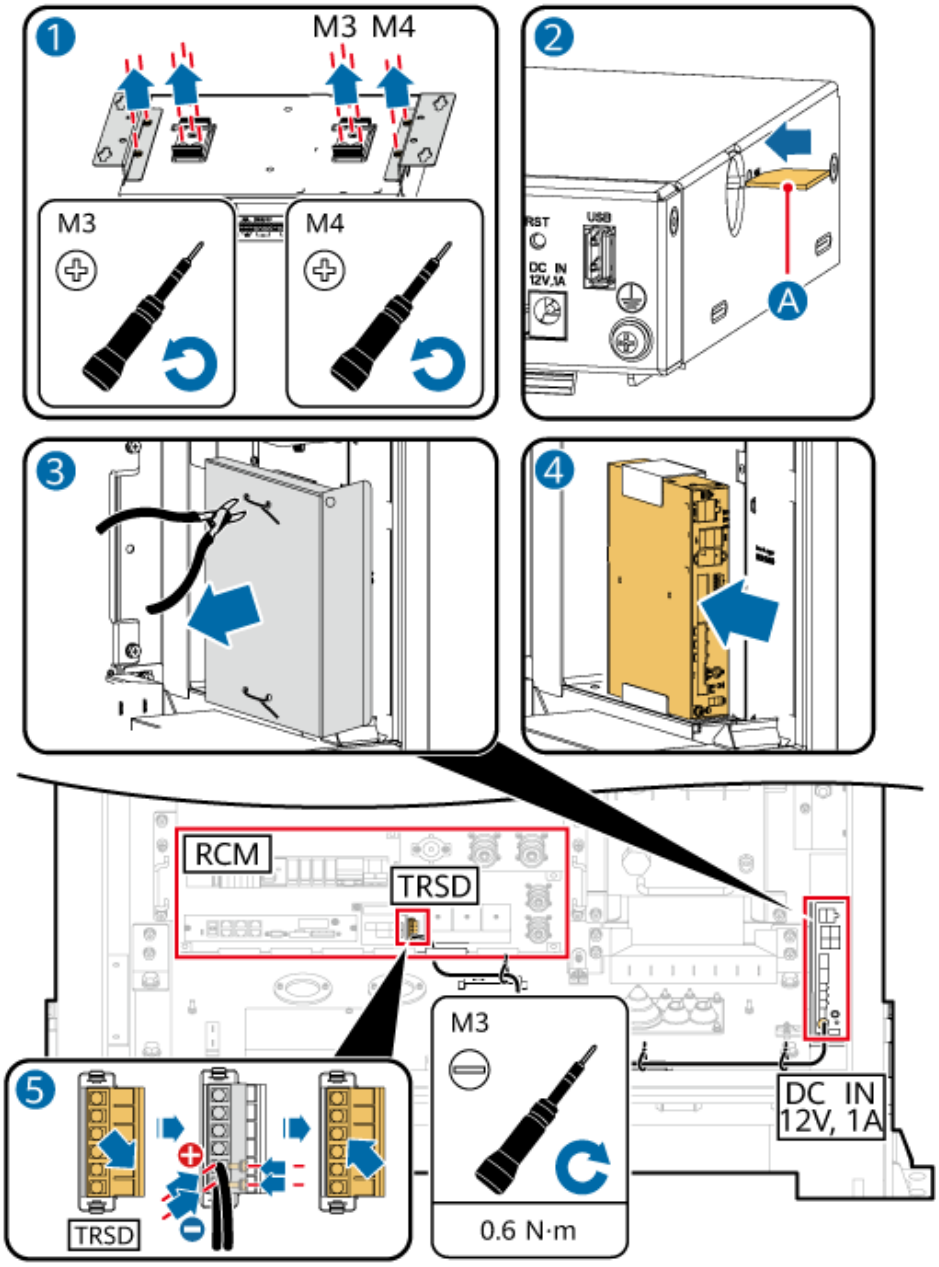

Step 6 Connect the 4G antenna: Install the 4G antenna at the rear of the cabinet top, route the cable through the cable hole at the bottom of the cabinet, and connect the cable to the 4G antenna port. Bind the cable inside the cabinet and secure the cable outside the cabinet using adhesive cable ties.

NOTICE

Route a communications cable outside the cabinet through a protective pipe, such as a PVC corrugated pipe, and secure the pipe to the side of the cabinet.

Step 7 Install the external protective cover for the SmartLogger.

 Copyright © Huawei Digital Power Technologies Co., Ltd.

Figure 7-12 SmartLogger cable connection 2

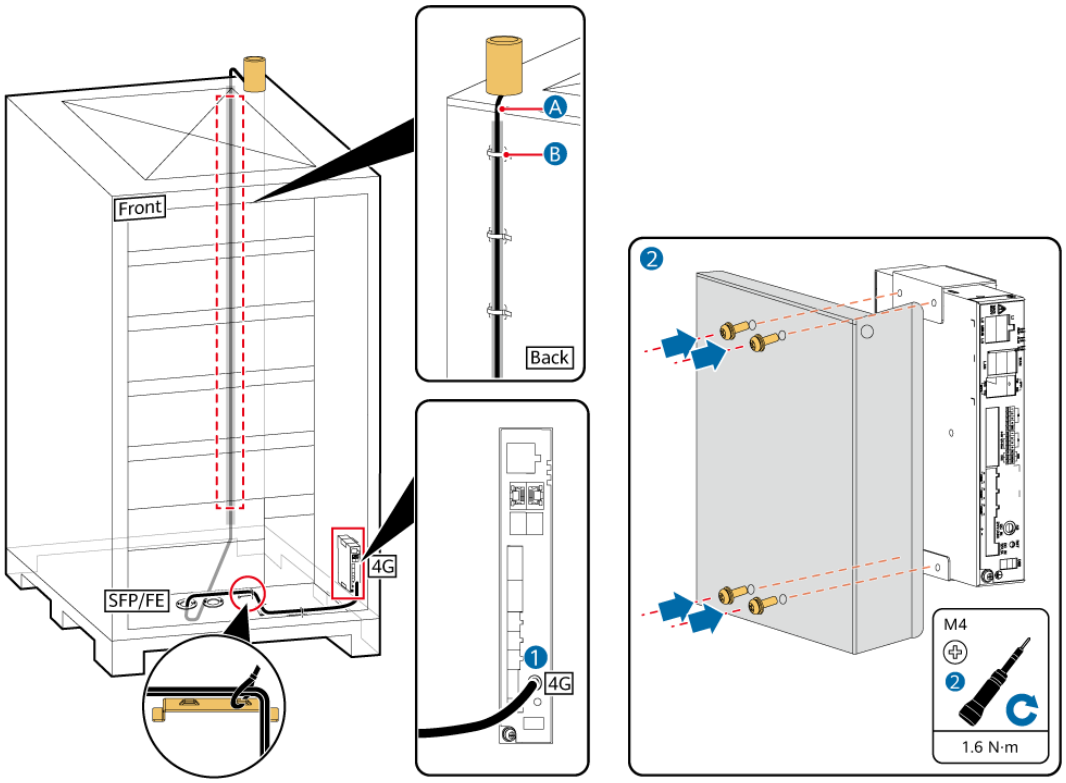

A: 4G antenna (optional)	B: Adhesive cable ties (prepared by the customer)

----End

7.7 Installing PACK Cables

NOTE

- The cable between PACK1 and the RCM needs to be installed onsite. Only the BAT– terminal on PACK1 needs to be connected using a cable. Other cables have been preinstalled.
- PACK cable installation shall be performed during the power-on procedure. For details, see **8 Powering On the ESS**.
- Check the PACK cables and ensure that they are securely connected.

Step 1 Check that the PACK cables and cables to the BAT+ and BAT– terminals of the RCM are securely connected and intact.

Step 2 Connect the general output power cables of PACKs.

 Copyright © Huawei Digital Power Technologies Co., Ltd.

NOTE

- Before connecting a power cable terminal, ensure that the snap-fit cap is unlocked.
- After connecting a power cable terminal, check that:
  - The snap-fit cap is locked.
    - Model 1: The snap-fit cap is in the correct position. For details, see **Figure 7-14**.
    - Model 2: Push the snap-fit cap until it clicks into place. For details, see **Figure 7-15**.
  - The snap-fit head is completely inserted into the slot.

Figure 7-13 Position for connecting a battery pack cable

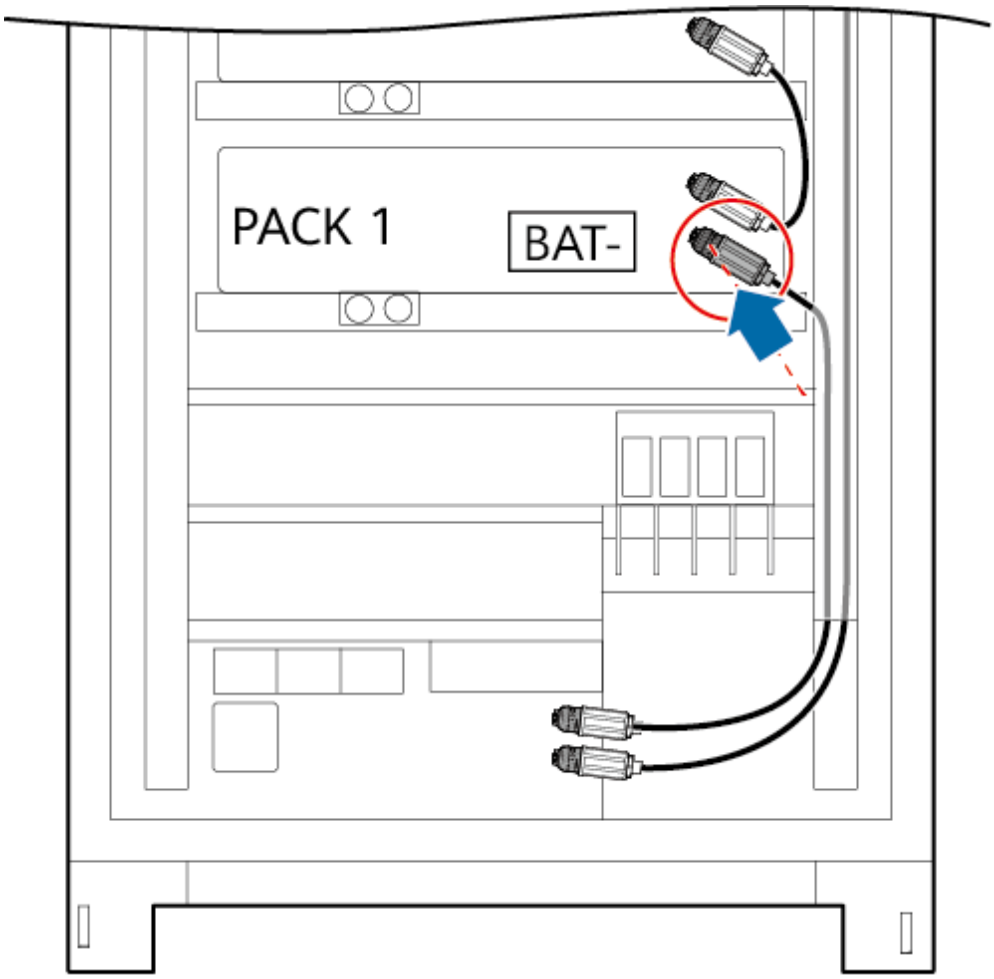

Figure 7-14 Connecting a power cable terminal (model 1)

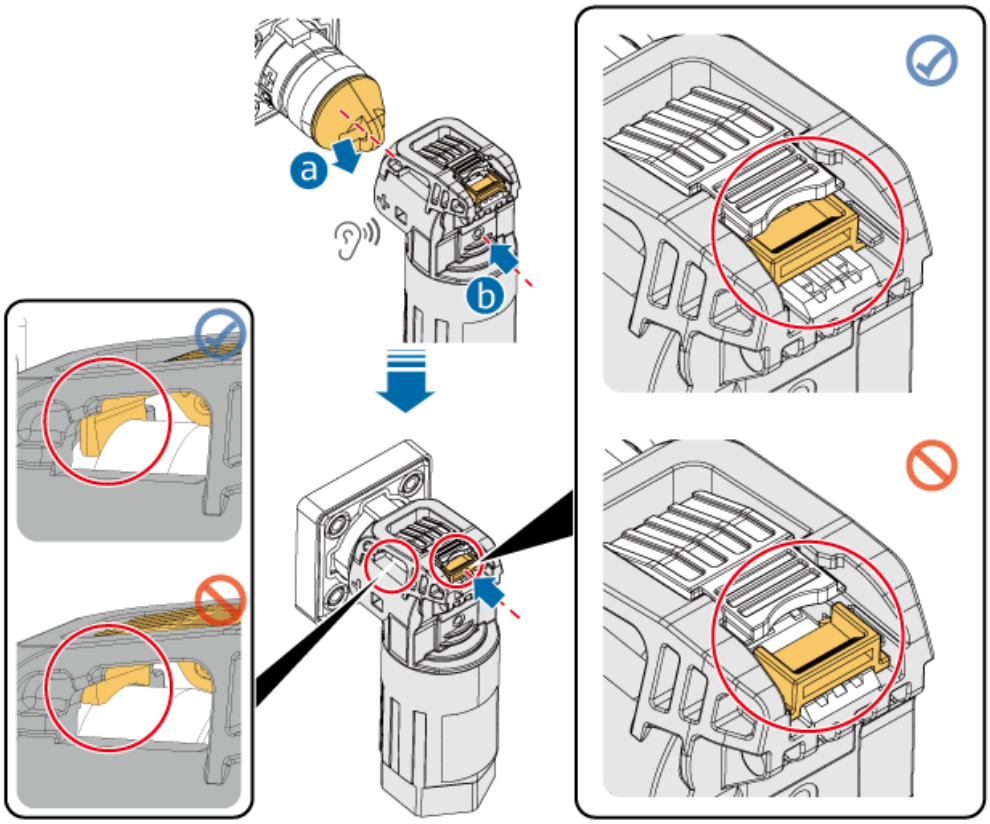

 Copyright © Huawei Digital Power Technologies Co., Ltd.

Figure 7-15 Connecting a power cable terminal (model 2)

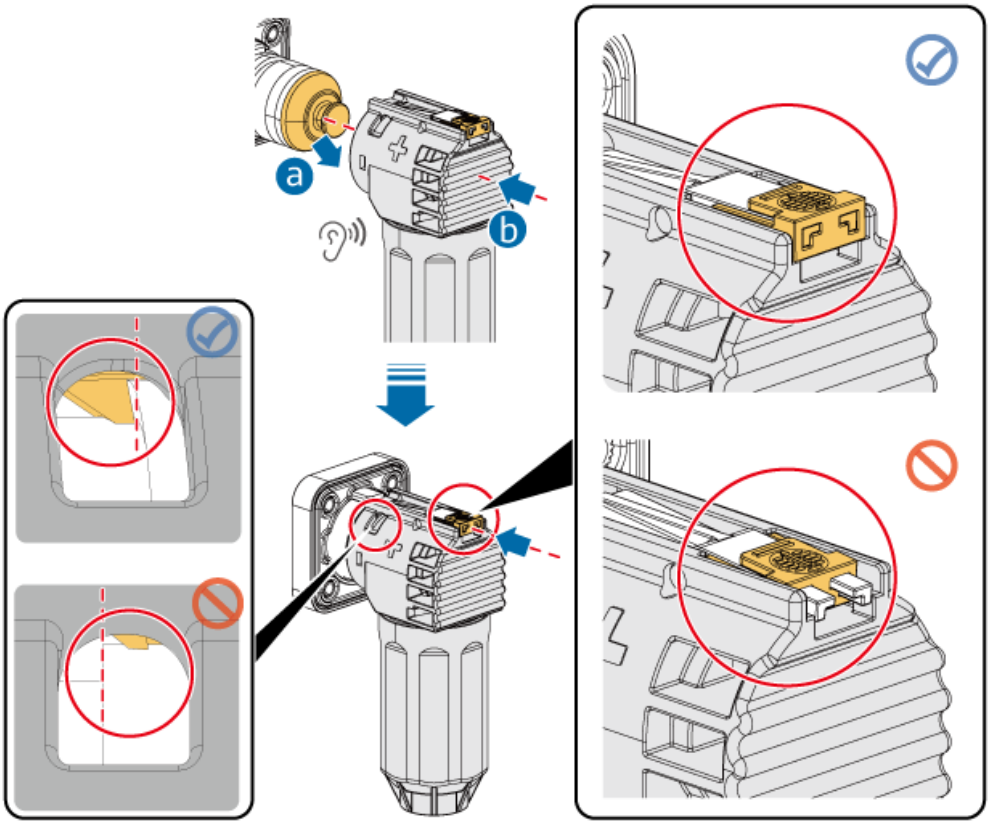

Step 3 After the power cables are installed, mark alignment lines on the terminals to confirm proper installation. For details about how to mark alignment lines, see **Figure 7-16** or **Figure 7-17**.

NOTE

It is recommended that the operating personnel and acceptance personnel mark alignment lines separately to ensure that the power cable terminals are correctly installed.

 Copyright © Huawei Digital Power Technologies Co., Ltd.

Figure 7-16 Marking alignment lines to confirm proper installation (model 1)

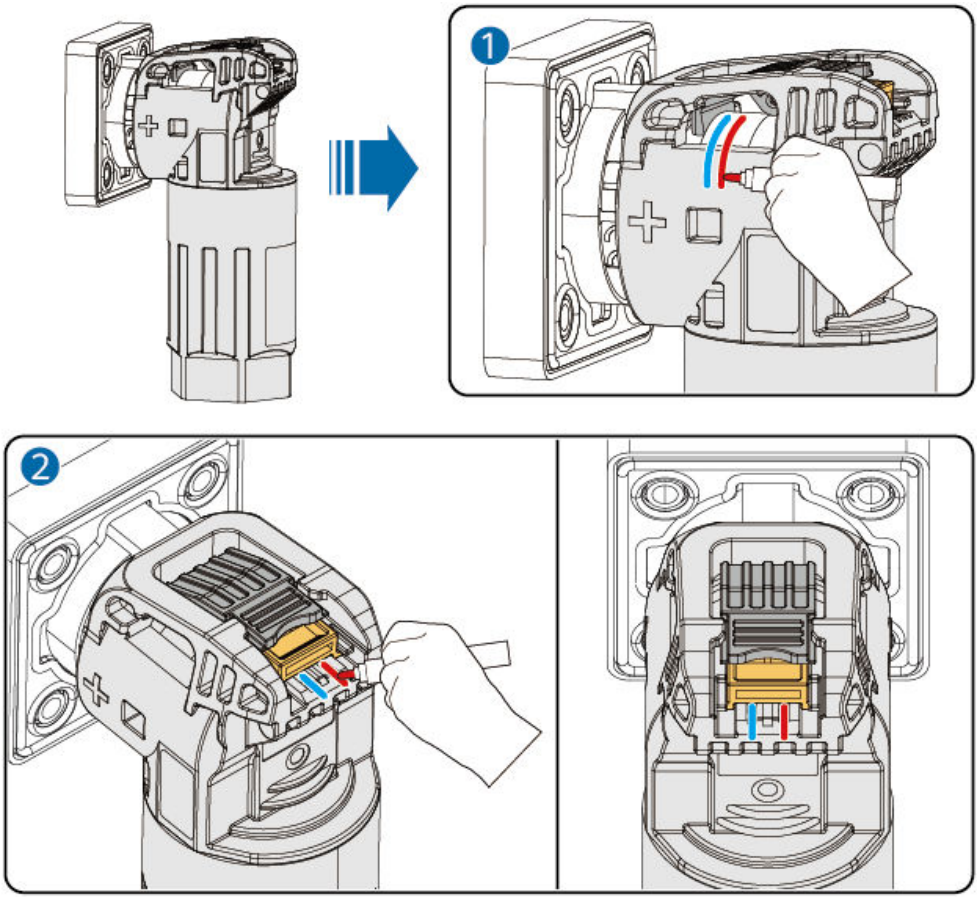

Figure 7-17 Marking alignment lines to confirm proper installation (model 2)

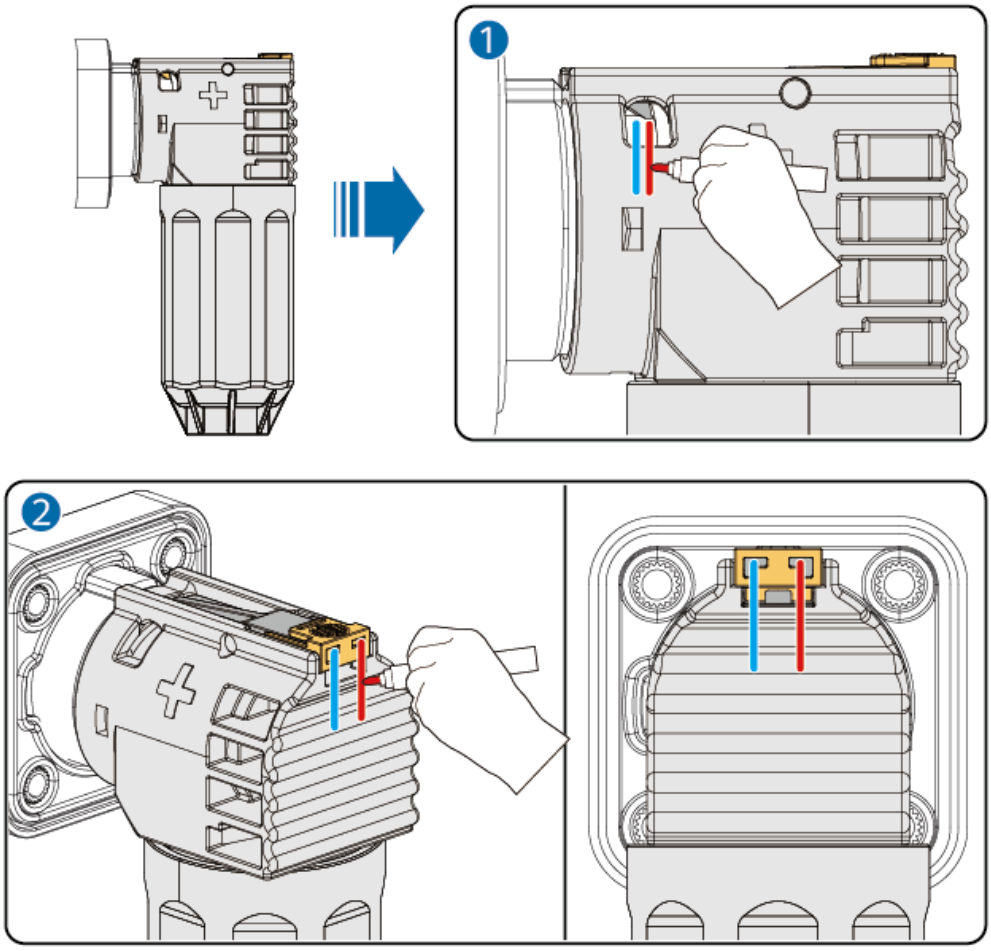

----End

7.8 Follow-up Procedure

CAUTION

When sealing the cable holes, fill the gap between cables with the sealing putty. After sealing the cable holes, check the cable holes carefully to ensure that they are securely sealed with the sealing putty.

Step 1 Install the RCM cover.

Figure 7-18 Installing the RCM cover

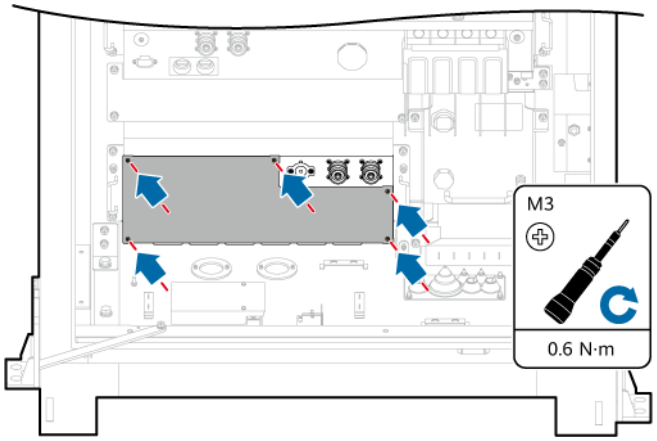

Step 2 After cables are installed, seal the PCS cable holes using the delivered sealing putty.

Figure 7-19 Sealing PCS cable holes

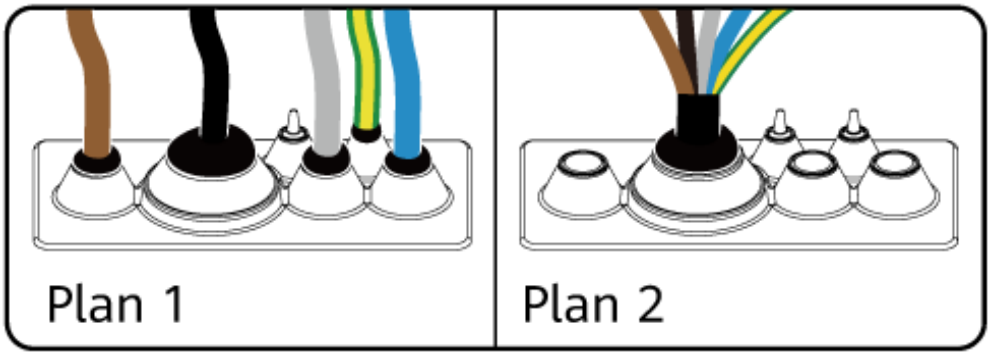

Step 3 After cables are installed, seal the cable holes for power cables and communications cables using the delivered sealing putty.

Figure 7-20 Sealing cable holes for power cables and communications cables

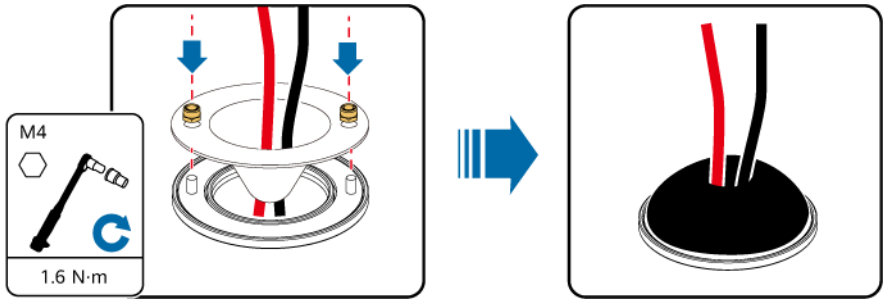

Step 4 Reinstall the cable baffle plate.

 Copyright © Huawei Digital Power Technologies Co., Ltd.

Figure 7-21 Installing the cable baffle plate

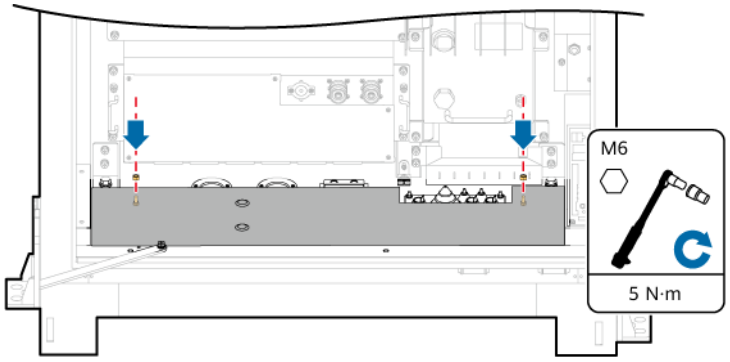

----End

 Copyright © Huawei Digital Power Technologies Co., Ltd.

8 Powering On the ESS

8.1 Check Before Power-On

8.1.1 General Check

No.	Check Item	Acceptance Criteria
1	Appearance	• The equipment is intact and free from rust or paint flake-off. If the paint flakes off, repair the damaged paint. • The labels on the device are clear. Damaged labels must be replaced. • The three-in-one label and nameplate label of the equipment are clear and visible. • The cabinet door is not deformed and it can be opened and closed properly.
2	Cable appearance	• Cable sheathings are properly wrapped and not damaged. • Cable hoses are intact. • Cables are intact and free of signs of splicing.
3	Cable connection	• Cables are connected in the designed positions. • Terminals are prepared as required and securely connected. • Labels on both ends of each cable are clear and specific, and attached in the same direction.

 Copyright © Huawei Digital Power Technologies Co., Ltd.

No.	Check Item	Acceptance Criteria
4	Cable routing	• Electrical and extra low voltage (ELV) cables are routed separately. • Cables are neat and tidy. • Cable tie joints are evenly cut without burrs. • Cables are placed properly with slack at bending points to avoid stress. The bending radius is ≥ 15D (D indicates the cable diameter). • Cables are routed neatly without twists or crossovers in the cabinets.
5	Switch	• The DIP switch status of the T/H sensor is correct. (For details, see **Table 2-26**.)

8.1.2 ESS Installation Check

NOTICE

Do not open the cabinet door when the humidity is high (relative humidity ≥ 80% continuously), for example, on rainy days. If the cabinet door is open for 0.5 hour or longer when the humidity is high, manually perform forced dehumidification. Otherwise, the equipment may fail or the microgrid may collapse.

You can check **Scenario** on the SmartLogger WebUI.

- SmartLogger3000: **Deployment Wizard** > **Connect Device**
- SmartLogger5000/SmartMGC5000: **Monitoring** > **Logger** > **Running Parameters**

Perform dehumidification as follows:

1. Check that the auxiliary AC power supply to the ESS is powered on. In the off-grid scenario, use the UPS or other external backup power supplies as the auxiliary power supply. In the on/off-grid and on-grid scenarios, use the mains power as the auxiliary power supply when the grid is available.

2. Log in to the SmartLogger WebUI and choose **Monitoring > ESS > Running Param**. The page for setting running parameters is displayed.

3. Start dehumidification:

- SmartLogger3000: Choose **Basic Parameters** and set **Forced dehumidification control** to **Start-up**.
- SmartLogger5000/SmartMGC5000: Choose **System Configuration** and set **Forced dehumidification control** to **Started**.

4. Click **Submit**. After the setting is successful, the manual dehumidification starts. View the alarm information to check that the system has started forced dehumidification. The alarm will be automatically cleared after the dehumidification is complete, which takes more than 10 minutes.

 Copyright © Huawei Digital Power Technologies Co., Ltd.

Cabinet

No.	Check Item	Acceptance Criteria
1	Installation	• The installation meets the design requirements. • The cabinet is level, and each door opens normally.
2	Appearance	The cabinet surface is free from cracks, dents, and scratches. If the paint flakes off, repair the damaged paint.
3	Cabinet grounding	Ground the cabinet correctly according to the requirements of the power distribution system.
4	Accessory	The number and positions of accessories installed meet design requirements.
5	Label	All labels are correct, clear, and complete.

Interior

No.	Check Item	Acceptance Criteria
1	Auxiliary power circuit breaker	The auxiliary power circuit breaker is turned off.
3	Cable	The bolts for installing the cables are tightened and the cables are not loose.
4	Cable hole sealing	Cable holes are sealed.
5	Components (PCS, DCDC, RCM, BCU, and LTMS)	All components are intact.
6	Foreign object	Foreign objects such as tools and remaining materials are cleared.
7	SPD	The SPD indicator is green.
8	Power meter	The power meter is free from cracks, dents, and damage, and its buttons are normal.
9	Power meter fuse	The fuse is intact. Check that the fuse is functioning using a multimeter.
10	Cabinet grounding	The ground conductor is securely connected to the ground terminal of the cabinet. For details, see **2.6.1 Circuit Diagram**.

 Copyright © Huawei Digital Power Technologies Co., Ltd.

No.	Check Item	Acceptance Criteria
11	Torque	Use a torque tool to secure the bolts. Ensure that the torque error does not exceed 10% of the specified value.
12	LTMS	There is no sign of leakage on the liquid cooling pipes, ports, and the bottom of the ESS.
13	Coolant	The LTMS coolant is above the Min scale.

8.2 Power-On Operations

DANGER

Wear insulated gloves and use insulated tools to prevent electric shocks or short circuits.

CAUTION

- During the power-on procedure, monitor the system for faults. If you detect any faults, power off the ESS, rectify the faults, and then continue with the procedure.
- If batteries are fully discharged or overdischarged during system installation and commissioning, charge the batteries promptly to prevent damage due to overdischarge.
- If the ESS has not been used for six months or longer after being installed, it must be checked and tested by professionals before operation.
- If a circuit breaker in the ESS trips, check the corresponding load side. Turn on the circuit breaker only after you have confirmed that there is no short circuit or other fault to prevent the fault from spreading and causing safety risks. For example, if an RCCB trips, check whether the LTMS AC output wiring terminal on the RCM is short-circuited and whether the load on the corresponding line is faulty. Turn on the RCCB only after you have confirmed that there is no short circuit or other fault.

NOTICE

- Before power-on and long-term operation, remove the desiccants from the ESS and dispose of them according to the applicable local waste disposal act. If the ESS is powered off immediately after being powered on, keep the desiccants in the ESS.

 Copyright © Huawei Digital Power Technologies Co., Ltd.

NOTE

- Before operating switches in the RCM panel, remove the sealing plate from the RCM and reinstall it after power-on.
- Before power-on, ensure that the power cables (BAT+ and BAT–) between the PACK and the RCM are connected. For details, see **7.7 Installing PACK Cables**.

Procedure

Step 1 Prepare for power-on.

1. Remove the blue protective film from the ESS to avoid compromising the ESS heat dissipation.

Figure 8-1 Preparing for power-on

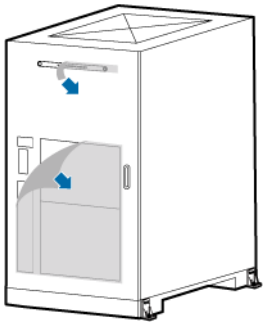

Step 2 Check whether the auxiliary power supply is normal.

The voltage of the auxiliary power supply is measured at the wiring terminals. Before the measurement, remove the protective covers from the wiring terminals. After the measurement is complete, reinstall the protective covers. Before the measurement, turn on the auxiliary power switches on the customer side. After the measurement is complete, turn off the auxiliary power switches on the customer side.

WARNING

During operation, ensure that the positive and negative poles of the wiring terminals are not in contact to prevent short circuits.

1. Remove the covers: Remove the RCM cover, protective cover from the mains AC input wiring terminal (MAINS), and protective cover from the UPS AC input wiring terminal (UPS) (only when a UPS is configured).
2. Turn on the auxiliary power switches on the customer side: Turn on the mains auxiliary power switch on the customer side and the UPS auxiliary power switch on the customer side (only when a UPS is configured).
3. Measure the voltages: Use a multimeter to measure the AC voltage of the mains input terminal (MAINS) and the AC voltage of the UPS input terminal (UPS) (only when a UPS is configured). Ensure that the voltages are within the normal range, that is, 176–300 V.

 Copyright © Huawei Digital Power Technologies Co., Ltd.

4. Turn off the auxiliary power switches on the customer side: Turn off the mains auxiliary power switch on the customer side and the UPS auxiliary power switch on the customer side (only when a UPS is configured).
5. Install the covers: Install the protective cover for the mains AC input wiring terminal (MAINS) and the protective cover for the UPS AC input wiring terminal (UPS) (only when a UPS is configured).

Figure 8-2 Checking whether the auxiliary power supply is normal

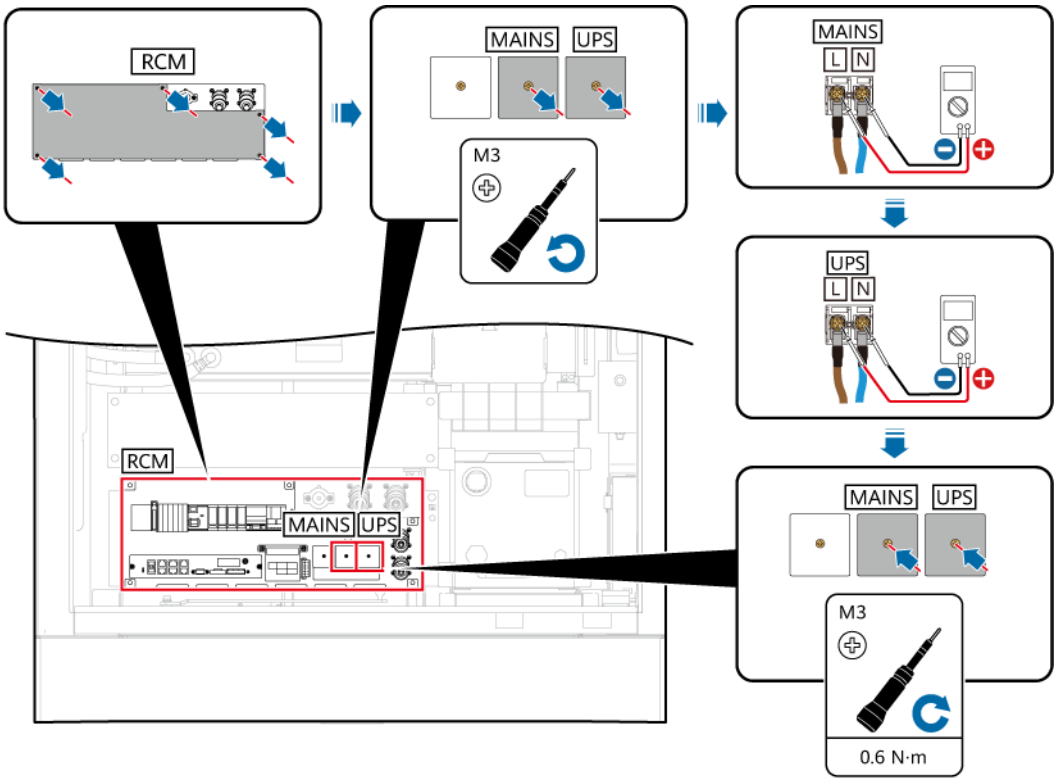

Step 3 Check whether the auxiliary power loop on the RCM is normal.

1. Turn on the auxiliary power switches on the customer side: Turn on the mains auxiliary power switch on the customer side and the UPS auxiliary power switch on the customer side (only when a UPS is configured).
2. Turn on the switches on the RCM: Turn on the residual current circuit breaker (RCCB), mains AC input switch QF1, and UPS AC input switch QF2 (only when a UPS is configured) on the RCM. Ensure that the running indicator (RUN) is steady green or blinking.
3. Turn off the auxiliary power switches on the customer side: Turn off the mains auxiliary power switch on the customer side and the UPS auxiliary power switch on the customer side (only when a UPS is configured).
4. Install the RCM cover.

 Copyright © Huawei Digital Power Technologies Co., Ltd.

Figure 8-3 Checking whether the auxiliary power loop on the RCM is normal

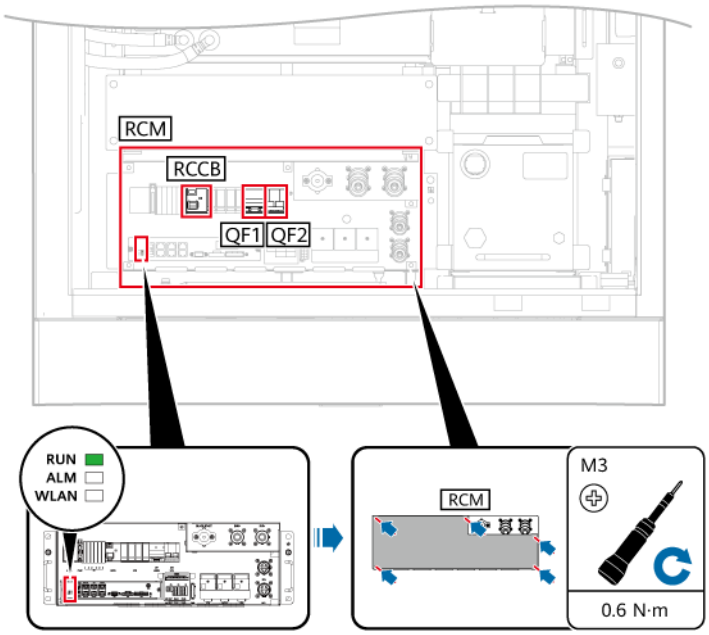

Step 4 Install battery pack cables.

1. Connect the BAT– cable to PACK1.

Figure 8-4 Installing battery pack cables

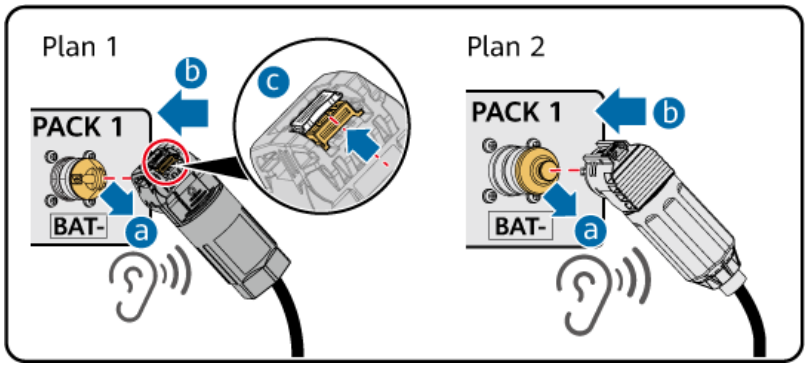

Step 5 Power on the PCS AC side and check whether the power supply is normal.

 Copyright © Huawei Digital Power Technologies Co., Ltd.

NOTICE

- An SPD is required for the customer's power distribution cabinet. The recommended SPD specification is 20 kA.
- Select an appropriate general power distribution switch based on local industry standards and regulations. The recommended specifications are as follows:
  - Three-phase AC switch: rated current 250 A, leakage current ≥ 1 A, rated voltage ≥ 380 V AC (depending on the actual grid voltage level).
  - When the auxiliary power supply cables are connected to the PCS terminal, set the three-phase current imbalance of the circuit breaker on the customer side to ≥ 22 A. (This operation is optional. Skip this step for a circuit breaker without the current imbalance monitoring function.)
  - Breaking capability > Short-circuit current on the low-voltage side of the user. For example, if the rated capacity of the transformer at the grid connection point is 200 kVA and the short-circuit impedance is 4%, the short-circuit current (I_{cc}) on the low-voltage side is about 8.357 kA.

1. Turn on the general power distribution switch of the customer's power distribution cabinet.
2. Set a multimeter to the AC voltage mode and measure the AC voltage of the PCS input terminals. Ensure that the voltage is within the normal range, that is, 380–480 V (depending on the local grid code).

Figure 8-5 Powering on the PCS AC side and checking whether the power supply is normal

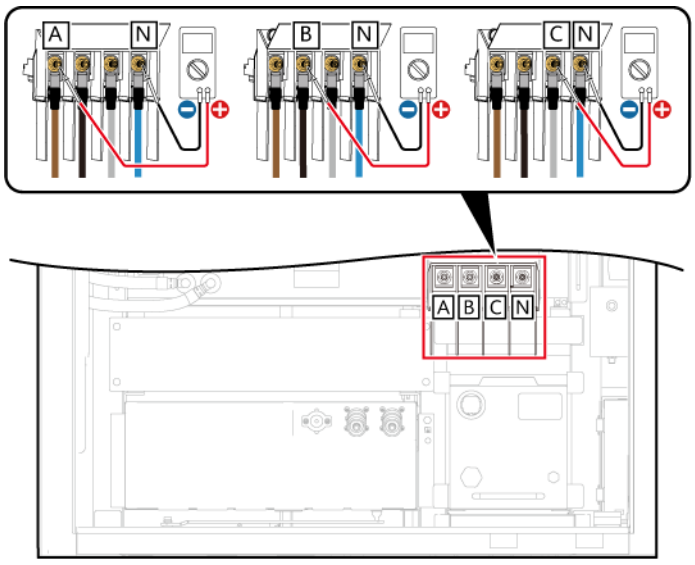

Step 6 Power on the auxiliary power supply.

1. Turn on the auxiliary power supply switch of the customer's power distribution cabinet.
2. Turn on the ESS power switch on the UPS side. (Perform this step only when a UPS is configured.)

----End

 Copyright © Huawei Digital Power Technologies Co., Ltd.

9 ESS Commissioning

9.1 Commissioning Methods

NOTICE

- When the SmartLogger is installed inside the ESS, you are advised to use the app for commissioning to avoid opening the door for a long time during commissioning.
- The ESS will shut down when you perform **Restore Factory Settings**, **Clear Historical Data**, **Software Upgrade**, or **Restart System** on the ESS. Therefore, exercise caution when performing these operations.

The ESS supports the following commissioning methods:

- Commissioning on the SmartLogger WebUI
- Commissioning on the app

9.2 Prerequisites

⚠ CAUTION

Before closing the cabinet door, remove any foreign objects (such as branches and leaves) from the door edge and surrounding door panel area. This prevents water leakage caused by debris stuck between the door edge and the rubber sealing surface.

Closing the Cabinet Door

Before deployment and commissioning, close the cabinet door.

 Copyright © Huawei Digital Power Technologies Co., Ltd.

Figure 9-1 Closing the cabinet door

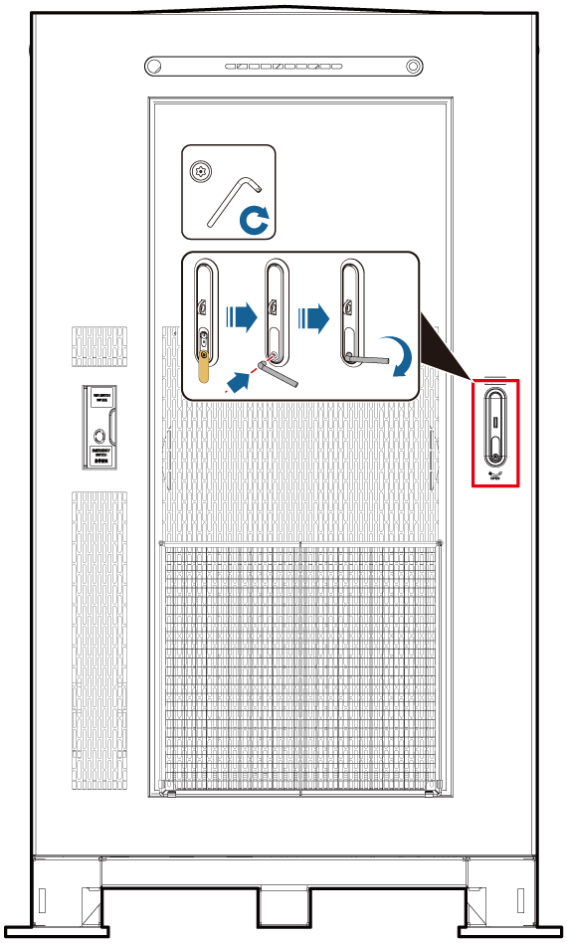

Setting the Startup Authorization Code

You can set the startup authorization code on the SmartLogger WebUI or the app.

NOTICE

Complete installation and cable connection in accordance with **5.1 Site Selection Requirements** and **7 Installing Cables** for the ESS. Failure to meet these requirements may result in the startup authorization code not being issued. As a result, the ESS cannot be started.

Do not relocate the ESS without permission. If relocation is necessary, contact the manufacturer or its authorized service partner. Unauthorized relocation may trigger equipment alarms, cause shutdown, and affect the equipment warranty. After the equipment is relocated, review safety risks such as the installation site selection and construction quality to obtain the startup authorization code.

- Method 1: Setting the startup authorization code on the app (applicable to SmartLogger3000 and SmartLogger5000)

 Copyright © Huawei Digital Power Technologies Co., Ltd.

Figure 9-2 ESS startup authorization procedure

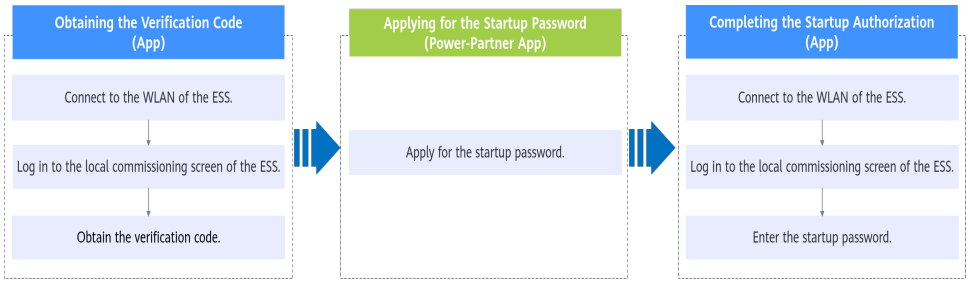

a. Obtain the verification code.

   i. Log in to the app, scan the WLAN QR code on the ESS (the QR code on the right of the SN on the device), and connect to the WLAN of the ESS.

   Figure 9-3 QR code example (for reference only; the actual QR code on the device prevails)

   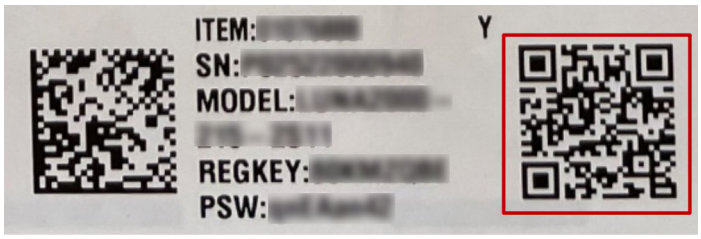

   NOTE

   - The WLAN name of a product consists of "Device name-Product SN." (The last six digits of the WLAN name of some products are the same as the last six digits of the product SN.)
   - For the first connection to the device WLAN, log in with the initial password. You can obtain the initial WLAN password from the label on the device.
   - To ensure account security, protect the password by changing it periodically, and keep it secure. Your password might be stolen or cracked if it is left unchanged for extended periods. If a password is lost, the device cannot be accessed. In these cases, the Company shall not be liable for any loss.
   - If the login screen is not displayed after you scan the QR code, check whether your phone is correctly connected to the device WLAN. If not, manually select and connect to the WLAN.
   - If the message **This WLAN network has no Internet access. Connect anyway?** is displayed when you connect to the built-in WLAN, tap **CONNECT**. Otherwise, you cannot log in to the system. The actual UI and messages may vary with mobile phones.
   - If the WLAN of the ESS cannot be found or the connection fails, press the WiFi button for 1s to 6s to start the WLAN module.

   ii. Log in to the local commissioning screen of the ESS as the **installer** user, and obtain **Verification code**.

NOTE

- Set the password as prompted at the first login.
- To ensure account security, protect the password by changing it periodically, and keep it secure.

b. On the Power-Partner app, apply for **Startup password** using **Verification code**.

NOTE

Contact the device vendor or its authorized supervision service provider to apply for **Startup password** through the Power Partner app.

c. Use the app to scan the WLAN QR code on the ESS to log in to the local commissioning screen of the ESS as the **installer** user, enter **Startup password**, and tap **Authorized**.

Figure 9-4 ESS startup authorization

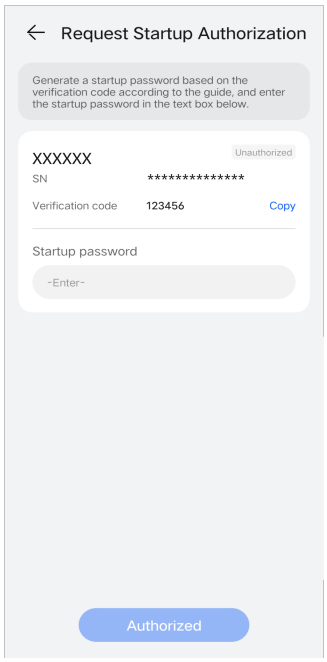

- Method 2: Setting the startup authorization code on the SmartLogger WebUI (applicable to SmartLogger3000)

a. Use **Startup authorization verification code** to apply for **Startup authorization code**.

NOTE

Contact the device vendor or its authorized supervision service provider to apply for a startup authorization code through the Power Partner app.

- Method 1: Choose **Monitoring** > **ESS** > **Running Info** > **Basic Information** to view **Startup authorization verification code**.
- Method 2: Choose **Deployment Wizard** > **Connect Device** to view **Startup authorization verification code**.

b. Set **Startup authorization code** of the ESS.

 Copyright © Huawei Digital Power Technologies Co., Ltd.

- Method 1: Choose **Deployment Wizard** > **Connect Device**, enter **Startup authorization code**, and click  to make the startup authorization code take effect.
- Method 2: Choose **Monitoring** > **ESS** > **Running Param** > **Basic Parameters**, and set **Startup authorization code**.

9.3 Commissioning the ESS (SmartLogger WebUI)

For ESS deployment and commissioning on the SmartLogger WebUI, see the following documents based on the actual networking application:

- For an on-grid ESS, see **HUAWEI LUNA2000-(107-241) Series Commercial and Industrial Hybrid Cooling Grid Forming ESS Solution User Manual (On-Grid, SmartLogger3000)** or **HUAWEI LUNA2000-(107-241) Series Commercial and Industrial Hybrid Cooling Grid Forming ESS Solution User Manual (On-Grid, SmartMGC5000B and SmartLogger5000B)**.
- For a microgrid ESS, see **HUAWEI LUNA2000-(107-241) Series Commercial and Industrial Hybrid Cooling Grid Forming ESS Solution User Manual (Microgrid, SmartLogger3000)** or **HUAWEI LUNA2000-(107-241) Series Commercial and Industrial Hybrid Cooling Grid Forming ESS Solution User Manual (Microgrid, SmartMGC5000B)**.

9.4 Commissioning the ESS (App)

For details about how to deploy and commission the ESS on the app, see **App Quick Guide (SmartLogger)**.

⚠ CAUTION

The default value of **DHCP** is **Enable**. If **DHCP** needs to be set to **Disable** in the scenario where multiple ESSs are combined, set **DHCP** to **Disable** for all ESSs (access the local commissioning screen of the app, and choose **Settings** > **Communication settings** > **Wired Network Settings** > **DHCP**), and plan static IP addresses based on the actual networking requirements to ensure that the IP addresses do not conflict.

 Copyright © Huawei Digital Power Technologies Co., Ltd.

10 Powering Off the ESS

10.1 Power-Off Commands

Step 1 Log in to the SmartLogger WebUI and send a shutdown command.

- SmartLogger3000: Choose **Maintenance** > **Device Mgmt.** > **Connect Device**, select the ESS to be shut down, and click the shutdown button  in the upper right corner.
- SmartLogger5000/SmartMGC5000: Choose **Maintenance** > **Device Management** > **Startup/Shutdown**, select the ESS to be shut down, click **Shutdown**, and select **Selected devices** from the drop-down list.

Step 2 Choose **Overview** > **Active Alarms** to view system alarms generated after the shutdown. If any alarm is generated, handle the alarm according to the alarm handling suggestions.

Step 3 Click **Monitoring**, view the device status, and ensure that the shutdown is successful.

----End

10.2 Power-Off Operations

NOTICE

For an ESS that is not operating, perform power-off operations immediately to reduce battery pack loss. However, the ESS must still be charged periodically.

 Copyright © Huawei Digital Power Technologies Co., Ltd.

Figure 10-1 Power-off operations

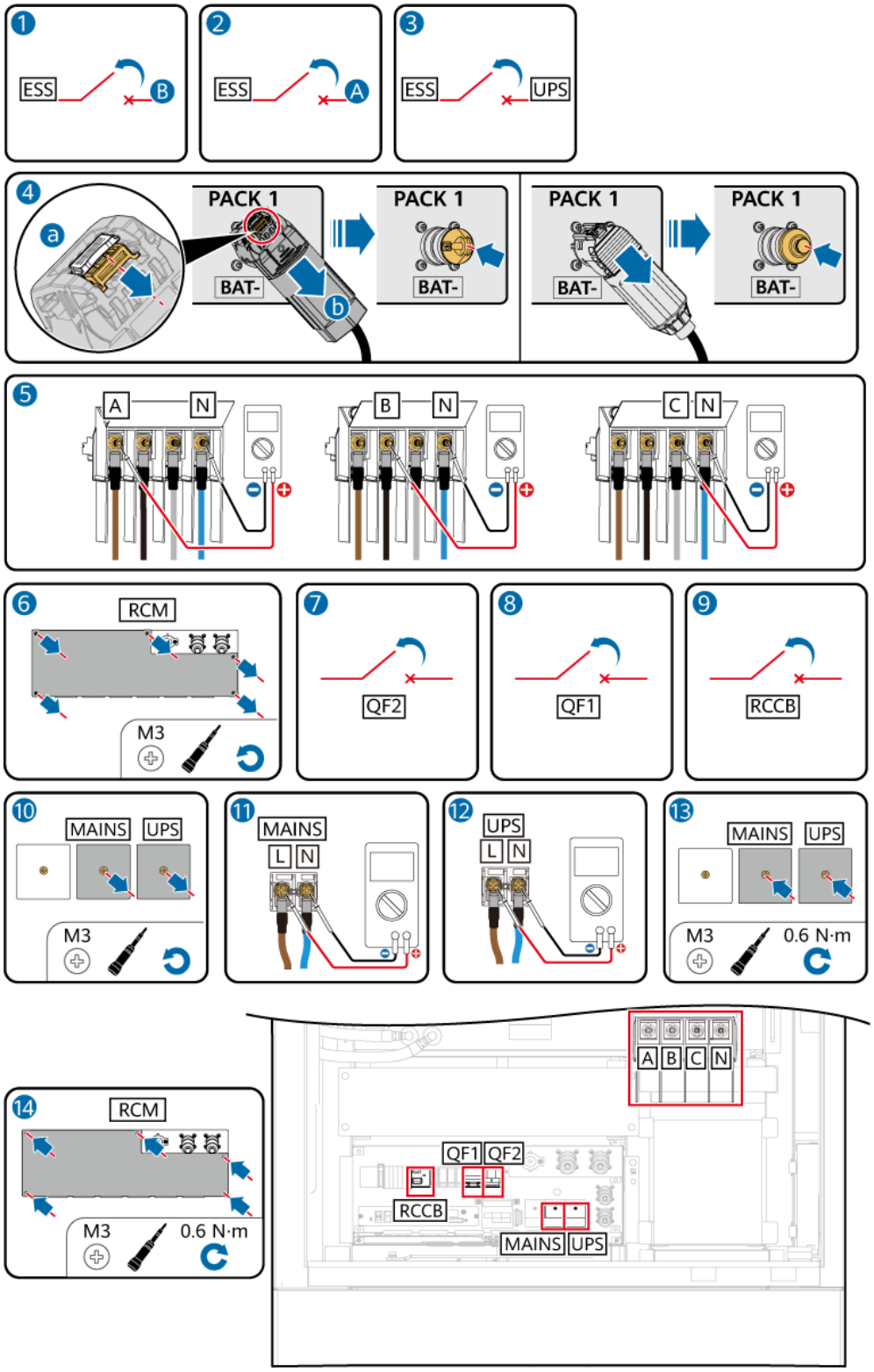

 Copyright © Huawei Digital Power Technologies Co., Ltd.

A: Auxiliary power supply switch of the customer's power distribution cabinet	B: General power distribution switch of the customer's power distribution cabinet

Procedure

Step 1 Turn off the general power distribution switch of the customer's power distribution cabinet.

Step 2 Turn off the auxiliary power supply switch of the customer's power distribution cabinet.

Step 3 (Optional) Turn off the ESS power switch on the UPS side. This operation is required when a UPS is configured.

Step 4 Remove the BAT– cable terminal from PACK1.

Step 5 Use a multimeter to measure the AC voltage of the PCS AC terminals. The voltage is close to 0.

Step 6 Remove the RCM cover.

Step 7 (Optional) Turn off the UPS AC input switch QF2 on the RCM. This operation is required when a UPS is configured.

Step 8 Turn off the mains AC input switch QF1 on the RCM.

Step 9 Turn off the RCCB on the RCM.

Step 10 Remove the protective cover from the mains AC input wiring terminal (MAINS). If a UPS is configured, remove the protective cover from the UPS AC input wiring terminal (UPS).

Step 11 Use a multimeter to measure the AC voltage of the mains input terminals (MAINS). The voltage is close to 0.

Step 12 (Optional) Use a multimeter to measure the AC voltage of the UPS input terminals (UPS). The voltage is close to 0.

Step 13 Reinstall the protective cover to the mains AC input wiring terminal (MAINS). If a UPS is configured, install the protective cover to the UPS AC input wiring terminal (UPS).

Step 14 Reinstall the RCM cover.

----End

 Copyright © Huawei Digital Power Technologies Co., Ltd.

11 Alarm Reference

For details about alarms, see **HUAWEI LUNA2000-(107-241) Series Commercial and Industrial Hybrid Cooling Grid Forming ESS Alarm Reference**.

 Copyright © Huawei Digital Power Technologies Co., Ltd.

12 Technical Specifications

NOTE

- The ESS specifications table uses the PCS2000-108K-MB1 as an example. For details about the parameters of other PCS power ranges, see **Technical Specifications**.

Table 12-1 ESS specifications

Item	LUNA2000-241-2S1-DS	LUNA2000-241-2S1	LUNA2000-215-2S10	LUNA2000-215-2S11	LUNA2000-161-2S11	LUNA2000-107-1S11
Nominal energy of a battery rack	241.0 kWh	241.0 kWh	215.0 kWh	215.0 kWh	161.3 kWh	107.5 kWh
Nominal capacity of a battery rack	314.0 Ah	314.0 Ah	280.0 Ah	280.0 Ah	280.0 Ah	280.0 Ah
Rated charge and discharge rate of a battery rack	0.45CP	0.45CP	0.5CP	0.5CP	0.67CP	1C
Rated voltage of a battery rack	768 V	768 V	768 V	768 V	576 V	384 V
Voltage range of a battery rack	648–852 V	648–852 V	648–864 V	648–864 V	486–648 V	324–432 V

 Copyright © Huawei Digital Power Technologies Co., Ltd.

Item	LUNA2000-241-2S1-DS	LUNA2000-241-2S1	LUNA2000-215-2S10	LUNA2000-215-2S11	LUNA2000-161-2S11	LUNA2000-107-1S11
Maximum current of a battery rack	223.3 A	221.2 A	221.2 A	221.2 A	280.0 A	280.0 A
Battery pack model	LUNA2000-60-2E1	LUNA2000-60-2E1	LUNA2000-54-2E1	LUNA2000-54-2E1	LUNA2000-54-1E1	LUNA2000-54-1E1
Battery rack configuration	(1P60S)4S	(1P60S)4S	(1P60S)4S	(1P60S)4S	(1P60S)3S	(1P60S)2S
Intra-battery rack balancing mode	Pack-level active balancing	Pack-level active balancing	Pack-level active balancing	Pack-level active balancing	Pack-level active balancing	Pack-level active balancing
DCDC model	LUNA2000B-110U-LM51	-	-	LUNA2000B-110U-LM51	LUNA2000B-110U-LM51	LUNA2000B-110U-LM51
DCDC configuration of a battery rack	1	-	-	1	1	1
PCS model	PCS2000-108K-MB1/ PCS2000-99K-MB1/ PCS2000-60K-MB1/ PCS2000-50K-MB1	PCS2000-108K-MB1/ PCS2000-99K-MB1/ PCS2000-60K-MB1/ PCS2000-50K-MB1	PCS2000-108K-MB1	PCS2000-108K-MB1	PCS2000-108K-MB1/ PCS2000-99K-MB1/ PCS2000-60K-MB1/ PCS2000-50K-MB1	PCS2000-108K-MB1/ PCS2000-99K-MB1/ PCS2000-60K-MB1/ PCS2000-50K-MB1
Rated mains voltage	420 V/440 V/480 V	380 V/400 V/415 V	380 V/400 V/415 V	420 V/440 V/480 V	380 V/400 V/415 V 420 V/440 V/480 V	380 V/400 V/415 V 420 V/440 V/480 V

Item	LUNA2000-241-2S1-DS	LUNA2000-241-2S1	LUNA2000-215-2S10	LUNA2000-215-2S11	LUNA2000-161-2S11	LUNA2000-107-1S11
DCAC configuration of a battery rack	1	1	1	1	1	1
Rated charge and discharge current of the system	148.5 A @ 420 V AC 141.7 A @ 440 V AC 129.9 A @ 480 V AC	164.1 A @ 380 V AC 155.9 A @ 400 V AC 150.3 A @ 415 V AC	164.1 A @ 380 V AC 155.9 A @ 400 V AC 150.3 A @ 415 V AC	148.5 A @ 420 V AC 141.8 A @ 440 V AC 130.0 A @ 480 V AC	164.1 A @ 380 V AC 155.9 A @ 400 V AC 150.3 A @ 415 V AC 148.5 A @ 420 V AC 141.8 A @ 440 V AC 130.0 A @ 480 V AC	164.1 A @ 380 V AC 155.9 A @ 400 V AC 150.3 A @ 415 V AC 148.5 A @ 420 V AC 141.8 A @ 440 V AC 130.0 A @ 480 V AC
Rated charge and discharge current of the system (1.1 times overload, 2-hour continuous operation)	163.3 A @ 420 V AC 155.9 A @ 440 V AC 142.9 A @ 480 V AC	180.5 A @ 380 V AC 171.5 A @ 400 V AC 165.3 A @ 415 V AC	180.5 A @ 380 V AC 171.5 A @ 400 V AC 165.3 A @ 415 V AC	163.4 A @ 420 V AC 155.9 A @ 440 V AC 142.9 A @ 480 V AC	180.5 A @ 380 V AC 171.5 A @ 400 V AC 165.3 A @ 415 V AC 163.4 A @ 420 V AC 155.9 A @ 440 V AC 142.9 A @ 480 V AC	-

Item	LUNA2000-241-2S1-DS	LUNA2000-241-2S1	LUNA2000-215-2S10	LUNA2000-215-2S11	LUNA2000-161-2S11	LUNA2000-107-1S11
Rated discharge current of the system (1.2 times overload)	178.1 A @ 420 V AC (1 min) 170.0 A @ 440 V AC (1 min) 155.9 A @ 480 V AC (1 min)	197.0 A @ 380 V AC (1 min) 187.1 A @ 400 V AC (1 min) 180.4 A @ 415 V AC (1 min)	197.0 A @ 380 V AC (1 min) 187.1 A @ 400 V AC (1 min) 180.4 A @ 415 V AC (1 min)	178.2 A @ 420 V AC (1 min) 170.1 A @ 440 V AC (1 min) 155.9 A @ 480 V AC (1 min)	197.0 A @ 380 V AC (1 min) 187.1 A @ 400 V AC (1 min) 180.4 A @ 415 V AC (1 min) 178.2 A @ 420 V AC (1 min) 170.1 A @ 440 V AC (1 min) 155.9 A @ 480 V AC (1 min)	-
Rated discharge current of the system (1.3 times overload)	193.0 A @ 420 V AC (5s) 184.2 A @ 440 V AC (5s) 168.9 A @ 480 V AC (5s)	213.4 A @ 380 V AC (5s) 202.7 A @ 400 V AC (5s) 195.4 A @ 415 V AC (5s)	213.4 A @ 380 V AC (5s) 202.7 A @ 400 V AC (5s) 195.4 A @ 415 V AC (5s)	193.0 A @ 420 V AC (5s) 184.3 A @ 440 V AC (5s) 168.9 A @ 480 V AC (5s)	-	-
Maximum discharge power	140.4 kW	140.4 kW	140.4 kW	140.4 kW	129.6 kW	108.0 kW
Battery temperature control mode	Hybrid air and liquid cooling	Hybrid air and liquid cooling	Hybrid air and liquid cooling	Hybrid air and liquid cooling	Hybrid air and liquid cooling	Hybrid air and liquid cooling

Item	LUNA2000-241-2S1-DS	LUNA2000-241-2S1	LUNA2000-215-2S10	LUNA2000-215-2S11	LUNA2000-161-2S11	LUNA2000-107-1S11
LTMS model	LunaTMS 2000-H008SG00	LunaTMS 2000-H008SG00/ LunaTMS 2000-H008SG10/ LunaTMS 2000-H008SG30	LunaTMS 2000-H008SG00	LunaTMS 2000-H008SG00	LunaTMS 2000-H008SG00/ LunaTMS 2000-H008SG20	LunaTMS 2000-H008SG00/ LunaTMS 2000-H008SG20
LTMS quantity	1	1	1	1	1	1
Dimensions (W x D x H)	1150 mm x 1800 mm x 2100 mm	1150 mm x 1800 mm x 2100 mm	1150 mm x 1800 mm x 2100 mm	1150 mm x 1800 mm x 2100 mm	1150 mm x 1800 mm x 2100 mm	1150 mm x 1800 mm x 2100 mm
Weight	< 2.8 t	< 2.8 t	< 2.8 t	< 2.8 t	< 2.4 t	< 2.0 t
IP rating	IP55	IP55	IP55	IP55	IP55	IP55
Operating temperature range	–30°C to +55°C (derated above 50°C)	–30°C to +55°C (derated above 50°C)	–30°C to +55°C (derated above 50°C)	–30°C to +55°C (derated above 50°C)	–30°C to +55°C (derated above 50°C)	–30°C to +55°C (derated above 50°C)
Storage temperature range	–35°C to +60°C	–35°C to +60°C	–35°C to +60°C	–35°C to +60°C	–35°C to +60°C	–35°C to +60°C
Operating humidity range	0–100% RH (non-condensing)	0–100% RH (non-condensing)	0–100% RH (non-condensing)	0–100% RH (non-condensing)	0–100% RH (non-condensing)	0–100% RH (non-condensing)
Surge protection	Type II (AC port)	Type II (AC port)	Type II (AC port)	Type II (AC port)	Type II (AC port)	Type II (AC port)
EMC	Class B	Class B	Class B	Class B	Class B	Class B

Item	LUNA2000-241-2S1-DS	LUNA2000-241-2S1	LUNA2000-215-2S10	LUNA2000-215-2S11	LUNA2000-161-2S11	LUNA2000-107-1S11
Noise (rated working conditions)	65 dB(A)	65 dB(A)	65 dB(A)	65 dB(A)	65 dB(A)	65 dB(A)
Maximum operating altitude	4000 m (power derating at > 2000 m)	4000 m (power derating at > 2000 m)	4000 m (power derating at > 2000 m)	4000 m (power derating at > 2000 m)	4000 m (power derating at > 2000 m)	4000 m (power derating at > 2000 m)
Auxiliary mains power supply	176–300 V AC, single-phase, dual-live wire ≤ 5 kVA	176–300 V AC, single-phase, dual-live wire ≤ 5 kVA	176–300 V AC, single-phase, dual-live wire ≤ 5 kVA	176–300 V AC, single-phase, dual-live wire ≤ 5 kVA	176–300 V AC, single-phase, dual-live wire ≤ 5 kVA	176–300 V AC, single-phase, dual-live wire ≤ 5 kVA
Auxiliary UPS power supply	176–300 V AC, 150 W, 370 VA @ 240 V AC	176–300 V AC, 150 W, 370 VA @ 240 V AC	176–300 V AC, 150 W, 370 VA @ 240 V AC	176–300 V AC, 150 W, 370 VA @ 240 V AC	176–300 V AC, 150 W, 370 VA @ 240 V AC	176–300 V AC, 150 W, 370 VA @ 240 V AC
Standby loss	138.0 W	138.0 W	138.0 W	138.0 W	138.0 W	138.0 W
System communications port	Ethernet/Optical fiber (optional)/RS485	Ethernet/Optical fiber (optional)/RS485	Ethernet/Optical fiber (optional)/RS485	Ethernet/Optical fiber (optional)/RS485	Ethernet/Optical fiber (optional)/RS485	Ethernet/Optical fiber (optional)/RS485
System communications protocol	Modbus TCP	Modbus TCP	Modbus TCP	Modbus TCP	Modbus TCP	Modbus TCP
Environmental protection requirement	RoHS 6	RoHS 6	RoHS 6	RoHS 6	RoHS 6	RoHS 6
Thermal runaway suppression system	Aerosol (≥ 110 g)	Aerosol (≥ 110 g)	Aerosol (≥ 110 g)	Aerosol (≥ 110 g)	Aerosol (≥ 110 g)	Aerosol (≥ 110 g)

Item	LUNA2000-241-2S1-DS	LUNA2000-241-2S1	LUNA2000-215-2S10	LUNA2000-215-2S11	LUNA2000-161-2S11	LUNA2000-107-1S11
Maximum efficiency	89.0%	91.3%	91.3%	89.0%	88.0%	86.0%
Standards compliance	UL 9540A, UN 38.3, IEC 62477-1, IEC 62040-1, IEC 61000-6-1/2/3/4, etc.	GB/T 36276, GB/T 34120, UL 9540A, UN 38.3, IEC 62477-1, IEC 62040-1, IEC 61000-6-1/2/3/4, etc.	GB/T 36276, GB/T 34120, UL 9540A, UN 38.3, IEC 62477-1, IEC 62040-1, IEC 61000-6-1/2/3/4, etc.	GB/T 36276, GB/T 34120, UL 9540A, UN 38.3, IEC 62477-1, IEC 62040-1, IEC 61000-6-1/2/3/4, etc.	UL 9540A, UN 38.3, IEC 62477-1, IEC 62040-1, IEC 61000-6-1/2/3/4, etc.	UL 9540A, UN 38.3, IEC 62477-1, IEC 62040-1, IEC 61000-6-1/2/3/4, etc.

A Grid Codes

NOTICE

- If the actual grid parameters exceed the allowed ranges of the local standard grid parameters, the Company shall not be liable for any resulting device damage.
- The LUNA2000-161-2S11 supports the grid code of the 380 V/400 V/415 V/420 V/440 V/480 V voltage level.
- The LUNA2000-107-1S11 supports the grid code of the 380 V/400 V/415 V/420 V/440 V/480 V voltage level.
- The LUNA2000-215-2S11 supports the grid code of the 420 V/440 V/480 V voltage level.
- The LUNA2000-215-2S10 supports the grid code of the 380 V/400 V/415 V voltage level.
- The LUNA2000-241-2S1-DS supports the grid code of the 420 V/440 V/480 V voltage level.
- The LUNA2000-241-2S1 supports the grid code of the 380 V/400 V/415 V voltage level.

NOTE

The grid codes are subject to change. The listed codes are for reference only.

Grid Code	Voltage Level	Description
CHINA-GBT34120-MV380	380 V	China commercial and industrial energy storage standard power grid
UTE C 15-712-1(A)	400 V	France mainland power grid
UTE C 15-712-1(B)	400 V	France island power grid
UTE C 15-712-1(C)	400 V	France island power grid
UTE C 15-712-1-MV480	480 V	France island power grid

 Copyright © Huawei Digital Power Technologies Co., Ltd.

Grid Code	Voltage Level	Description
FRANCE-EN50549-230	400 V	France power grid
FRANCE-EN50549-480	480 V	France power grid
FRANCE-EN50549-519/12-230	400 V	France power grid
FRANCE-EN50549-519/12-230	480 V	France power grid
CEI0-16	400 V	Italy power grid
CEI0-16-MV480	480 V	Italy power grid
CEI0-21	400 V	Italy power grid
CEI0-21-MV480	480 V	Italy power grid
TAI-PEA	380 V	Thailand grid-connection standard power grid
TAI-MEA	400 V	Thailand grid-connection standard power grid
Austria	400 V	Austria power grid
Austria-MV480	480 V	Austria power grid
AUSTRIA-TYPEB-LV400	400 V	Austria power grid
AUSTRIA-TYPEB-LV480	480 V	Austria power grid
AUSTRIA-TYPEB-MV400	400 V	Austria power grid
AUSTRIA-TYPEB-MV480	480 V	Austria power grid
EN50549-MV400	400 V	Pan-Europe power grid
EN50549-MV480	480 V	Pan-Europe power grid
EN50549-LV	400 V	Pan-Europe power grid
IEC61727	400 V	IEC 61727 - 50 Hz
IEC61727-60Hz	400 V	IEC 61727 - 60 Hz
IEC61727-MV480	480 V	IEC 61727 - 50 Hz
IEC61727-60Hz-MV480	480 V	IEC 61727 - 60 Hz
IEC61727-50Hz-420	420 V	IEC61727-50Hz
IEC61727-60Hz-420	420 V	IEC61727-60Hz
IEC61727-50Hz-440	440 V	IEC61727-50Hz
IEC61727-60Hz-440	440 V	IEC61727-60Hz
G99-TYPEA-LV	400 V	United Kingdom power grid
G99-TYPEB-LV	400 V	United Kingdom power grid

 Copyright © Huawei Digital Power Technologies Co., Ltd.

Grid Code	Voltage Level	Description
G99-TYPEB-HV	400 V	United Kingdom power grid
G99-TYPEB-HV-MV480	480 V	United Kingdom power grid
G99-TYPEA-HV	400 V	United Kingdom power grid
G59-England-MV480	480 V	United Kingdom power grid
G59-Scotland	400 V	United Kingdom power grid
G83-England	415 V	United Kingdom power grid
G83-Scotland	400 V	United Kingdom power grid
VDE-AR-N-4105	400 V	Germany power grid
VDE-AR-N4110	400 V	Germany power grid
VDE-AR-N4110-MV480	480 V	Germany power grid
VDE-AR-N4120-HV	400 V	Germany power grid
VDE-AR-N4120-HV480	480 V	Germany power grid
BDEW-MV	400 V	Germany power grid
BDEW-MV480	480 V	Germany power grid
Japan standard (50HZ)	480 V	Japan power grid
Japan standard (60HZ)	480 V	Japan power grid
Japan standard (MV400-50HZ)	400 V	Japan power grid
Japan standard (MV400-60HZ)	400 V	Japan power grid
Japan standard (MV420-50HZ)	420 V	Japan power grid
Japan standard (MV420-60HZ)	420 V	Japan power grid
Japan standard (MV440-50HZ)	440 V	Japan power grid
Japan standard (MV440-60HZ)	440 V	Japan power grid
CZECH-EN50549-LV230	400 V	Czech Republic power grid
CZECH-EN50549-B1/B2-230	400 V	Czech Republic power grid
Vietnam	400 V	Vietnam power grid
Vietnam-MV480	480 V	Vietnam power grid
SINGAPORE	400 V	Singapore power grid
Malaysian	400 V	Malaysia power grid
AS4777	400 V	Australia and New Zealand power grid

 Copyright © Huawei Digital Power Technologies Co., Ltd.

Grid Code	Voltage Level	Description
AS4777_ACT	400 V	Australia and New Zealand power grid
AS4777_NSW_ESS	400 V	Australia and New Zealand power grid
AS4777_NSW_AG	400 V	Australia and New Zealand power grid
AS4777_QLD	400 V	Australia and New Zealand power grid
AS4777_SA	400 V	Australia and New Zealand power grid
AS4777_VIC	400 V	Australia and New Zealand power grid
AUSTRALIA-AS4777_A-LV230	400 V	Australia and New Zealand power grid
AUSTRALIA-AS4777_B-LV230	400 V	Australia and New Zealand power grid
AUSTRALIA-AS4777_C-LV230	400 V	Australia and New Zealand power grid
AUSTRALIA-AS4777_NZ-LV230	400 V	Australia and New Zealand power grid
TAIPOWER	380 V	Taiwan (China) power grid
TAIPOWER-MV480	480 V	Taiwan (China) power grid
HONGKONG	380 V	Hong Kong (China) power grid
HONGKONG-MV480	480 V	Hong Kong (China) power grid
C10/11	400 V	Belgium power grid
C10/11-MV400	400 V	Belgium power grid
C11/C10-MV480	480 V	Belgium power grid
NRS-097-2-1	400 V	South Africa power grid
Philippines	380 V	Philippines power grid
EN50549-PL	400 V	Poland power grid
ABNT NBR 16149	400 V	Brazil power grid
ABNT NBR 16149-MV480	480 V	Brazil power grid
IEEE 1547-MV480	480 V	North America power grid
NTS	400 V	Spain power grid

 Copyright © Huawei Digital Power Technologies Co., Ltd.

Grid Code	Voltage Level	Description
VDE 0126-1-1-BU	400 V	Bulgaria power grid
RD1699/661	400 V	Spain power grid
EN50438-NL	400 V	Netherlands power grid
EN50438-NL-MV480	480 V	Netherlands power grid
EN50438-TR-MV480	480 V	Türkiye power grid
EN50438-TR	400 V	Türkiye power grid
ANRE	400 V	Romania power grid
ANRE-MV480	480 V	Romania power grid
ANRE-TYPEB	400 V	Romania power grid
ANRE-TYPEB-MV480	480 V	Romania power grid
EN50438_IE	400 V	Ireland power grid
Jordan-Transmission	400 V	Jordan power grid
Jordan-Distribution	400 V	Jordan power grid
Mexico-MV480	480 V	Mexico power grid
KENYA_ETHIOPIA	400 V	Kenya and Ethiopia power grid
NIGERIA	400 V	Nigeria power grid
DUBAI	400 V	Dubai power grid
DUBAI-MV480	480 V	Dubai power grid
ARGENTINA-MV500	500 V	Argentina power grid
SAUDI	400 V	Saudi Arabia power grid
SAUDI-MV480	480 V	Saudi Arabia power grid
OMAN	415 V	Oman power grid
KUWAIT	415 V	Kuwait power grid
BANGLADESH	400 V	Bangladesh power grid
ARGENTINA	400 V	Argentina power grid
Cambodia	400 V	Cambodia power grid
EN50549-SE	400 V	Sweden power grid
SWITZERLAND-LV230	400 V	Switzerland power grid
GREG030	400 V	Colombia power grid
GREG030-MV440	440 V	Colombia power grid

 Copyright © Huawei Digital Power Technologies Co., Ltd.

Grid Code	Voltage Level	Description
GREG030-MV480	480 V	Colombia power grid
PORTUGAL	400 V	Portugal power grid
DANMARK-EN50549-DK1-LV230	400 V	Denmark power grid
DANMARK-EN50549-DK2-LV230	400 V	Denmark power grid
SA-BESF-L	400 V	South Africa power grid

 Copyright © Huawei Digital Power Technologies Co., Ltd.

B Crimping an OT or DT Terminal

Requirements on an OT or DT Terminal

- If a copper cable is used, use copper wiring terminals.
- If a copper-clad aluminum cable is used, use copper wiring terminals.
- If an aluminum alloy cable is used, use copper-to-aluminum wiring terminals, or aluminum wiring terminals along with copper-to-aluminum washers.

NOTICE

- Do not connect aluminum wiring terminals to the terminal block. Otherwise electrochemical corrosion may occur, affecting the reliability of cable connections.
- Comply with the IEC 61238-1 requirements when using copper-to-aluminum wiring terminals, or aluminum wiring terminals along with copper-to-aluminum washers.
- Do not mix up the aluminum and copper sides of a copper-to-aluminum washer. The outer contour of the washer shall not be smaller than that of the OT/DT terminal. Ensure that the aluminum side of the washer contacts the aluminum wiring terminal, and that the copper side contacts the terminal block. It is recommended that washers and terminals be purchased from the same vendor.

 Copyright © Huawei Digital Power Technologies Co., Ltd.

Figure B-1 Requirements on an OT or DT terminal

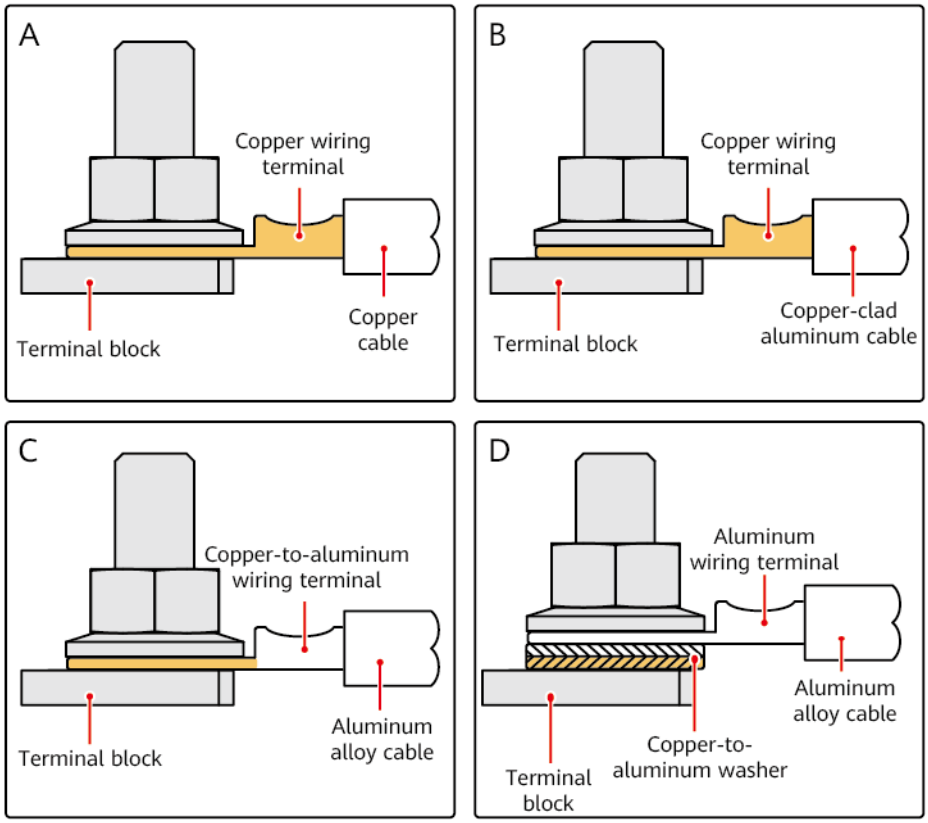

Crimping an OT or DT Terminal

NOTICE

- Avoid scratching the core wire when stripping a cable.
- The cavity formed after the conductor crimp strip of the OT or DT terminal has been crimped must wrap around the core wire completely. The core wire must make close contact with the OT or DT terminal.
- Wrap the wire crimping area with heat shrink tubing or insulation tape. The heat shrink tubing is used as an example. When crimping OT/DT terminals for electrical equipment, you must use heat shrink tubings.
- Use a heat gun carefully to avoid heat damage to the equipment.

 Copyright © Huawei Digital Power Technologies Co., Ltd.

Figure B-2 Crimping an OT terminal

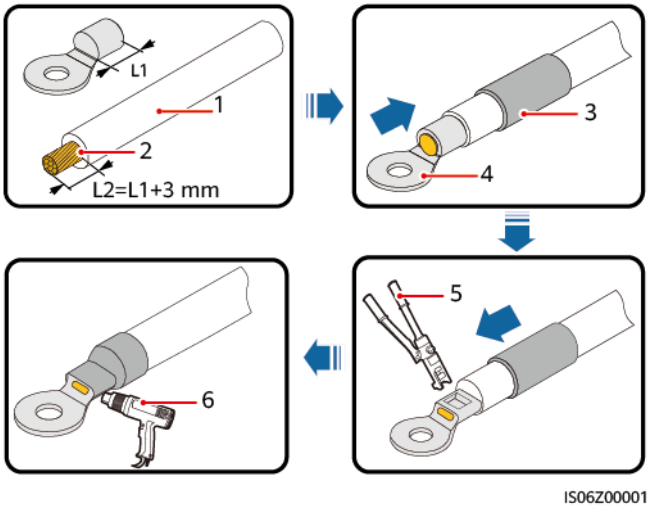

(1) Cable
(2) Core wire
(3) Heat shrink tubing
(4) OT terminal
(5) Hydraulic pliers
(6) Heat gun

Figure B-3 Crimping a DT terminal

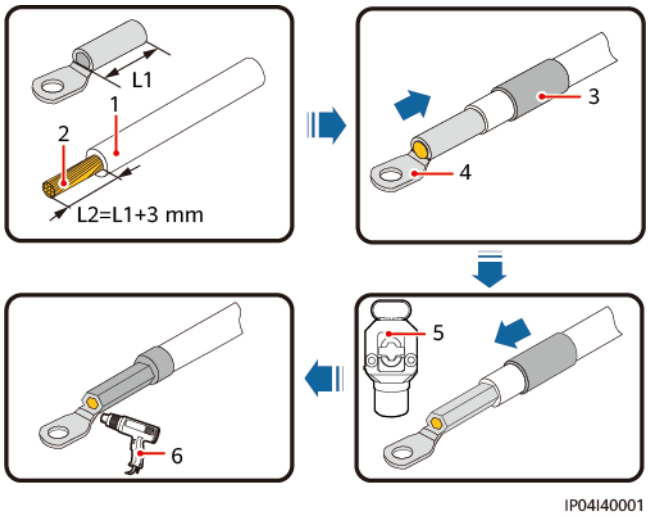

(1) Cable
(2) Core wire
(3) Heat shrink tubing
(4) DT terminal
(5) Hydraulic pliers
(6) Heat gun

 Copyright © Huawei Digital Power Technologies Co., Ltd.

C How Do I Repair Paint Damage?

Prerequisites

- Do not apply paint in bad weather, such as rain, snow, strong wind, and sandstorm, when there is no shelter outdoors.
- Prepare the following paint:
  - Primer: epoxy zinc-rich paint
  - Intermediate coat: epoxy micaceous iron oxide
  - Top coat: RAL 9003 (white) polyurethane paint

Paint Repair Description

The equipment appearance shall be intact. If paint has flaked off, repair paint damage immediately.

NOTE

Check the paint damage on the equipment and prepare appropriate tools and materials. The number of materials depends on site requirements.

Table C-1 Paint repair description

Paint Damage	Tool and Material	Number of Paint Repair Layers	Procedure
Slight scratch (steel base material not exposed)	Aerosol spray or polyurethane paint, brush (recommended for repainting a small area), fine sandpaper, anhydrous alcohol, cotton cloth, and paint sprayer (recommended for repainting a large area)	Slight coating damage: one or two layers	Perform **Step 1** and **Step 4**, or **Step 1**, **Step 3**, and **Step 4**.
Smudges that cannot be removed		Slight coating damage: one layer	Perform **Step 1** and **Step 4**.

 Copyright © Huawei Digital Power Technologies Co., Ltd.

Paint Damage	Tool and Material	Number of Paint Repair Layers	Procedure
Deep scratch and rust (primer damaged, steel base material exposed)	Aerosol spray or polyurethane paint, brush (recommended for repainting a small area), zinc-rich primer, epoxy micaceous iron oxide paint, fine sandpaper, anhydrous alcohol, cotton cloth, and paint sprayer (recommended for repainting a large area)	Severe coating damage: three layers	Perform **Step 1**, **Step 2**, **Step 3**, and **Step 4**.
Logo and pattern damage	If a logo or pattern is damaged, provide the logo size and color number. Seek help from a local supplier of advertisement coatings to formulate a repair solution based on the logo size, color, and damage.		
Dent	1. If a dent is less than or equal to 100 mm^2 in area and less than 3 mm in depth, fill the dent with Poly-Putty base and then perform the same operations as those for processing deep scratches. 2. If a dent is greater than 100 mm^2 in area or greater than 3 mm in depth, ask the local supplier for an appropriate repainting solution.		

Paint Requirements

Table C-2 Paint requirements

Item	Requirement
Primer thickness	60 μm
Intermediate coat thickness	120 μm
Top coat thickness	60 μm
Primer type	Epoxy zinc-rich paint
Intermediate coat type	Epoxy micaceous iron oxide paint
Top coat type	RAL 9003 polyurethane paint

 Copyright © Huawei Digital Power Technologies Co., Ltd.

Procedure

NOTE

- After paint repair, wait until the paint surface is dry before performing subsequent operations.
  - When you touch the paint and it does not stick to your fingers, the surface is dry. For details about the surface drying time, see the paint instructions.
  - The color of the repainted area must be consistent with that of the surrounding area. Use a colorimeter to measure the color difference (ΔE), which shall be less than or equal to 3. If a colorimeter is unavailable, ensure that there is no visible edge between the repainted area and the surrounding area. The paint shall also be free of bulges, scratches, flaking, or cracks.
  - If you choose to spray paint, it is recommended that you spray paint three times before checking the result. If the color does not meet the requirements, paint more times until the painting meets the requirements.

Step 1 Remove smudges, dust, or rust.

1. Gently polish damaged areas using fine sandpaper to remove smudges or rust.

Figure C-1 Polishing a damaged area using sandpaper

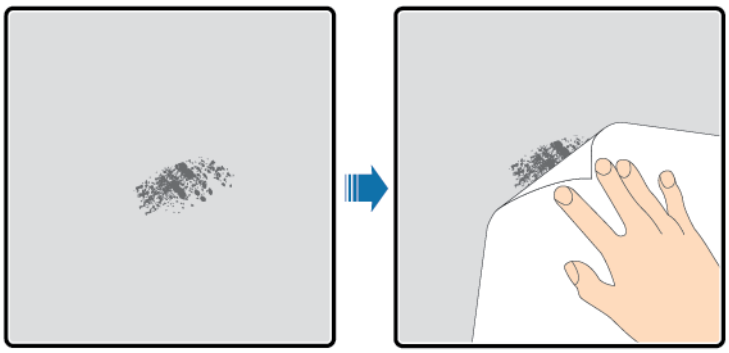

DM97000001

2. Dip a piece of cotton cloth into anhydrous alcohol and wipe the polished or damaged area to remove the dirt and dust. Then wipe off the anhydrous alcohol with a clean and dry cotton cloth

Figure C-2 Wiping a polished or damaged area using anhydrous alcohol

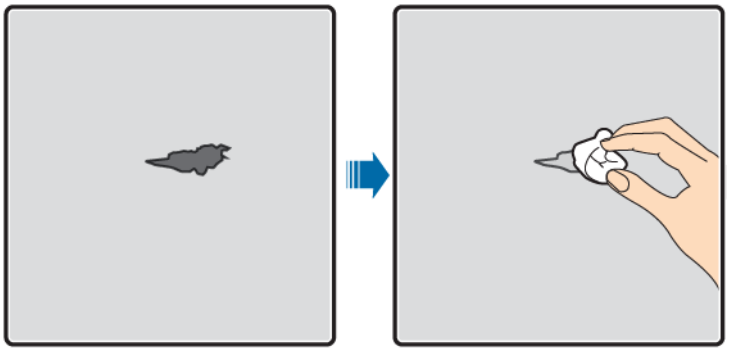

DD00000012

Step 2 Repair the primer (epoxy zinc-rich paint).

1. Apply epoxy zinc-rich paint on the damaged coat using a brush or paint sprayer. After paint repair, wait until the paint surface is dry.

NOTICE

- If the base material is exposed in the area to be repaired, apply epoxy zinc-rich primer, wait until the paint has dried, and then apply polyurethane top coat.
- Select epoxy zinc-rich primer or polyurethane top coat with a color same as the surface coat color of the equipment.

Step 3 Repair the intermediate coat (epoxy micaceous iron oxide).

Apply paint to the damaged area based on the damage degree of the paint using a brush or paint sprayer until all damage traces are invisible. After paint repair, wait until the paint surface is dry.

Step 4 Repair the top coat (polyurethane paint).

Apply paint evenly to the damaged area based on the damage degree of the paint using an aerosol spray, brush, or paint spray gun until all damage traces are invisible. After paint repair, wait until the paint surface is dry.

NOTICE

- Ensure that the painting is thin, even, and smooth.
- In the case that an equipment pattern has different colors, to prevent undamaged areas and those with different colors as the damaged area from being contaminated during repainting, cover such areas using white paper and adhesive tape before repairing paint.

Figure C-3 Repainting a damaged area

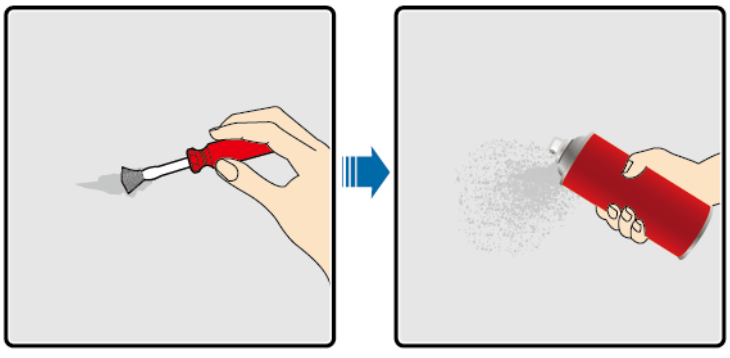

----End

 Copyright © Huawei Digital Power Technologies Co., Ltd.

D Emergency Handling

If an accident (including but not limited to the following) occurs on the site, ensure the safety of onsite personnel first and contact the Company's service engineers.

Battery Falling or Strong Impact

- If a battery has obvious damage or abnormal odor, smoke, or fire occurs, evacuate the personnel immediately, call emergency services, and contact the professionals. The professionals shall use fire extinguishing facilities to extinguish the fire under safety protection.
- If the appearance is not deformed or damaged, and there is no obvious abnormal odor, smoke, or fire, ensure safety and perform the following operations:
  - Warehouse: Evacuate personnel, transfer the battery to an open and safe place by professionals using mechanical tools, and contact the Company's service engineers. Leave the battery for an hour and ensure that the battery temperature is within the room temperature range (tolerance: ±10°C) before handling.
  - ESS onsite: Evacuate personnel, close the doors of the ESS, transfer the battery to an open and safe place by professionals using mechanical tools, and contact the Company's service engineers. Leave the battery for an hour before handling.

Flood

- Power off the system if it is safe to do so.
- If any part of the batteries is submerged in water, do not touch the batteries to avoid electric shock.
- Do not use batteries that have been soaked in water. Contact a battery recycling company for disposal.

 Copyright © Huawei Digital Power Technologies Co., Ltd.

Fire

DANGER

- If a fire occurs, power off the system if it is safe to do so.
- Extinguish the fire with carbon dioxide, FM-200 or ABC dry powder fire extinguishers.
- Ask firefighters to avoid contact with high-voltage components during fire fighting to prevent the risk of electric shock.
- Overheating may cause battery deformation, faults, and leakage of corrosive electrolytes or toxic gases. Use respiratory protective equipment and keep a safe distance from the batteries to prevent skin irritation and chemical burns.

Fire Alarm Horn/Strobe

When the alarm indicator on the equipment blinks or buzzes:

- Do not approach.
- Do not open the door.
- Stay away immediately.
- Cut off the power supply remotely only when your safety is guaranteed.

Gas Exhaust

- Onsite personal protection: Do not directly face the exhaust vents.
- Post-disaster product maintenance: Contact the Company's service engineers for evaluation.

Coolant Leakage

1. If the system is running, power it off while ensuring safety.

2. Check for possible leakage points, especially the joints of liquid cooling pipes, bends of moving pipes, and connecting points of two-way stop valves.

3. Replace the components (PACK, PCS, DCDC, LTMS, or liquid cooling pipes) at the leakage points.

4. Check whether any coolant contacts the RCM. If yes, replace the RCM promptly.

5. After the fault is rectified, clean the system, power on the system again, and check whether the system is normal. If any exception occurs, contact the Company's service engineers.

Extinguishant Release or Fire

- Suggestions for onsite O&M personnel:
  a. When a fire occurs, evacuate from the building or equipment area, press the fire alarm bell, and immediately call the fire emergency service. Notify the professional firefighters and provide them with relevant

 Copyright © Huawei Digital Power Technologies Co., Ltd.

product information, including but not limited to battery pack types, ESS capacity, and battery pack location and distribution.

b. Do not enter the affected building or equipment area under any circumstances, and do not open the doors of the ESS. Isolate and monitor the site. Keep irrelevant personnel away from the site.

c. After calling the fire emergency service, remotely power off the system while ensuring your own safety.

d. After professional firefighters arrive, provide relevant product information, including but not limited to battery pack types, ESS capacity, battery pack location and distribution, and user manuals.

e. After the fire is extinguished, the site must be handled by professionals in accordance with local laws and regulations. Do not open the doors of the ESS without permission.

f. Post-disaster product maintenance: Contact the Company's service engineers for evaluation.

- Suggestions for professional firefighters:

  a. For product information, see the information provided by O&M personnel, including but not limited to battery pack types, ESS capacity, battery pack location and distribution, and user manuals.

  b. Do not open the doors of the ESS before it is deemed safe by professionals.

  c. Follow local fire fighting regulations.

  d. When a fire occurs, prevent the fire from spreading to nearby ESSs.

 Copyright © Huawei Digital Power Technologies Co., Ltd.

E How Do I Recycle Used Batteries?

NOTICE

- The Company does not recycle batteries. Contact local recycling agencies to handle batteries.
- If there are no such agencies in your area, you can contact the nearest foreign recycling agencies.

Step 1 Contact the nearest recycling agencies.

Step 2 Recycling agencies assess the costs.

Step 3 Recycling agencies carry out recycling, which can be done in two ways:

- Onsite recycling: Recycling agencies can visit your sites to recycle lithium batteries, but the price depends on actual conditions such as the distance and transportation expenses.
- Centralized recycling: You can collect all lithium batteries to be recycled in one place for the recycling agencies to handle.

NOTE

You need to cover the related transportation expenses.

Step 4 Recycling agencies handle recycling. The recycled lithium batteries are at the disposal of the recycling agencies.

----End

 Copyright © Huawei Digital Power Technologies Co., Ltd.

F Certificate Management and Maintenance

F.1 Initial Certificate Risk Disclaimer

Huawei's initial certificates are mandatory identity credentials for Huawei devices before delivery. The disclaimer statements for using the certificates are as follows:

1. Huawei's initial certificates are used only to establish initial security channels for devices to access the customer network during deployment.
2. Initial certificates have a validity period. The validity period of Huawei's root certificates expires in 2041 and 2099, respectively, and the validity period of identity certificates expires earlier than that of root certificates. For details about how to query the expiration time of an identity certificate, see **F.4 Querying the Validity Period of an Identity Certificate**.
3. After devices access the customer network, the management responsibilities of the devices and digital certificates are transferred to the customer. Huawei recommends that the customer replace the initial certificates used by devices on the live network with customer's own certificates, and use certificates with a short validity period and periodically replace the certificates in accordance with industry best practices. This helps mitigate the risk of private key leakage of digital certificates and prevent service interruption caused by certificate expiration.

For details about the rights and responsibilities related to initial certificates, see **https://support.huawei.com/enterprise/en/bulletins-service/ENEWS2000015789**.

F.2 Application Scenarios of Initial Certificates

Usage	Scenario	Replacement Guide
Certificate used for communication with the SmartLogger	Certificate used by the IBCU to log in to the SmartLogger as the client.	**Certificate update**

 Copyright © Huawei Digital Power Technologies Co., Ltd.

Usage	Scenario	Replacement Guide
Certificate for communication with the app	Certificate used by the IBCU to connect to the mobile app as the server.	
Certificate for communication with the LCC	Certificate used by the IBCU to connect to the LCC as the server.	

F.3 Initial Certificate Update Guide

To improve system security, you are advised to replace the certificate and key with your own ones and periodically update the certificate and key.

NOTICE

1. In the scenario where the IBCU is interconnected with the SmartLogger, replace the certificate of the SmartLogger first. If the IBCU certificate is replaced first, the certificate verification will fail and the IBCU certificate rollback mechanism will be triggered. As a result, the certificate replacement fails.
2. When replacing certificates for the IBCU to communicate with the LCC in the southbound direction, you are advised to upload the root certificate CAs first and then replace the certificates.

You have applied for a new certificate from the CA and have obtained the new certificate files. **Table F-1** lists the certificate requirements.

Table F-1 Certificate requirements

Parameter	Requirement
Certificate signature algorithm	Use industry-leading security algorithms, such as sha256WithRSAEncryption or sha256ECDSA.
Key length	• For keys encrypted using RSA, the recommended length is 3072 bits or longer. • For keys encrypted using ECDSA, the length can be 256 or 384 bits. **NOTE** RSA keys shorter than 2048 bits or ECDSA keys shorter than 256 bits are insecure. For security purposes, ensure that the private key of the ER certificate is an RSA key of 3072 bits or longer or an ECDSA key of 256 bits or longer.

 Copyright © Huawei Digital Power Technologies Co., Ltd.

Parameter	Requirement
Certificate storage format	PEM. The file name extension can be .crt or .cer.
Private key file format	PKCS#1, PKCS#8, or ECC SEC1. The file name extension can be .key or .pem.
Password complexity of the private key file	• Contain 1 to 64 characters. • (Recommended) Contain 8 to 64 characters, including at least two types of the following: - Uppercase letters - Lowercase letters - Digits - Special characters (excluding <>;+&/|%(),`$)

The following uses LUNA2000B-V2 as an example to describe how to replace the app certificate.

Step 1 Log in to the app and choose **Maintenance** > **Certificate management** > **LUNA2000B-V2** or **LCC**.

Step 2 Tap **BIN Cascading Service**, **Modbus-TCP NMS**, or **Local O&M Service**.

Step 3 Replace the root certificate, customer certificate, and key file, enter the key password, and tap **Upload**.

The product supports certificates in the following formats: RSA key algorithm of 2048 bits or longer and ECC key algorithm of 256 bits or longer.

----End

NOTICE

Huawei's initial certificates preconfigured on Huawei devices during manufacturing are mandatory identity credentials for Huawei devices. The disclaimer statements for using the certificates are as follows:

- Huawei's initial certificates are used only in the deployment phase, for establishing initial security channels between devices and the customer's network. Huawei does not promise or guarantee the security for long-term use of the initial certificates.
- Huawei recommends that the customer periodically replace the initial certificates used by devices on the live network with customer's own certificates with short validity periods in accordance with industry best practices. This helps mitigate the risk of private key leakage of digital certificates and prevents service interruption caused by certificate expiration.
- Huawei's initial certificates are valid from the manufacturing date until December 29, 2099. The validity period may vary depending on products.
- After the initial certificate expires, services that use the certificate may be affected. The affected services vary depending on products and customization.
- It is recommended that customers deploy a PKI system to issue certificates for devices and software on the live network and manage the lifecycle of the certificates. To ensure security, certificates with short validity periods are recommended.
- The Huawei PKI root certificate used for initial configuration and connection of Huawei products during network access can be disabled (untrusted). (When a new Huawei NE needs to be verified when it is connected to the network, customers can enable the certificate.) It is recommended that customers disable the root certificate after completing the network access configuration and configuring the certificate issued by the customer CA for the product. This prevents service interruption caused by security risks and security events.

F.4 Querying the Validity Period of an Identity Certificate

Refer to the product's security maintenance manual (available in the release documentation) and query the expiration time of the identity certificate. This helps you update the certificate in a timely manner to improve system security.

 Copyright © Huawei Digital Power Technologies Co., Ltd.

G Contact Information

If you have any questions about this product, please contact us.

https://digitalpower.huawei.com

Path: **About Us** > **Contact Us** > **Global Service Hotlines**

To ensure faster and better services, we kindly request your assistance in providing the following information:

- Model
- Serial number (SN)
- Software version
- Alarm ID or name
- Brief description of the fault symptom

 Copyright © Huawei Digital Power Technologies Co., Ltd.

NOTE

EU Representative Information: Huawei Technologies Hungary Kft.
Add.: HU-1133 Budapest, Váci út 116-118., 1. Building, 6. floor.
Email: hungary.reception@huawei.com

H Digital Power Customer Service

https://digitalpower.huawei.com/robotchat/

I Acronyms and Abbreviations

A	
App	application
B	
BMU	battery monitoring unit
BCU	battery control unit
E	
ESS	energy storage system
D	
DC	direct current
DCDC	DC-DC Converter
F	
FE	fast Ethernet
G	

 Copyright © Huawei Digital Power Technologies Co., Ltd.

GWP	global warming potential
L	
LAN	local area network
LCC	liquid cooling controller
LED	light-emitting diode
LTMS	Liquid Thermal Management System
P	
PACK	battery pack
PCS	Power Converter System
R	
RCM	Rack Control Module
RST	reset
S	
SFP	small form-factor pluggable
SIM	subscriber identity module
SN	serial number
SOC	state of charge
U	

 Copyright © Huawei Digital Power Technologies Co., Ltd.

UPS	uninterruptible power system
W	
WAN	wide area network